HITACHI
Inspire the Next

SET FREE SERIES
FSN2

splitoff.ru

Большая библиотека технической документации
https://splitsystema48.ru/instrukcii-po-ekspluatacii-kondicionerov.html
каталоги, инструкции, сервисные мануалы, схемы.

Service manual

Outdoor Units: RAS-(8~48)FSN2

Все каталоги и инструкции здесь: https://splitsystema48.ru/instrukcii-po-ekspluatacii-kondicionerov.html

HITACHI
Inspire the Next

Contents

Model codes and descriptions 0
Units installation 1
Piping installation 2
Electrical wiring 3
Control system 4
Available optional functions 5
Test run 6
Troubleshooting 7
Spare parts 8
Servicing 9
Main parts 10
Field work instruction 11

Все каталоги и инструкции здесь: https://splitsystema48.ru/instrukcii-po-ekspluatacii-kondicionerov.html

0. Model codes and descriptions v

1. Units installation 1

1.1 General installation notes 2

1.2 Transportation and handling 4

1.2.1 Hanging method 4
1.2.1 Center of gravity 7

1.3. Outdoor units installation 8

1.3.1 Before installation 8
1.3.2 Installation location 9
1.3.3 Serial units installation 10
1.3.4 Multiple installation space 11
1.3.5. Foundations 15

2. Piping installation 17

2.1. Piping work considerations 18

2.1.1 Copper pipes and sizes 18
2.1.2 Three principles on refrigerant piping work 21
2.1.3 Suspension of refrigerant piping 21
2.1.4. Tightening torque 22
2.1.5. Brazing work 23

2.2. Outdoor units piping installation 24

2.2.1. Factory supplied accessories 24
2.2.2. Position of piping connections 25
2.2.3. Flange piping connection 26
2.2.4. Piping connection 27
2.2.5 Vacuum and refrigerant charge 28
2.2.6. Drain discharging boss 30

3. Electrical wiring 31

3.1. General check 32

3.2. Electrical wiring for the outdoor unit 33

3.2.1. Electrical wiring connection for outdoor unit 33
3.2.2. Setting the DIP switches for the outdoor unit 34

3.3. Common wiring 38

3.3.1. Electrical wiring between the indoor unit and the outdoor unit 38

3.4. Wire size 40

3.5. Electrical wiring diagrams 42

4. Control system 47

4.1. Device control system 48

4.1.1. RAS-8~48FSN2 refrigerant cycle control 48

4.2. Outdoor Units PCB 51

4.2.1. RAS-8~48FSN2 51

4.3. Protection and safety control 52

4.4. Standard operation sequence 53

4.4.1. Cooling process 53
4.4.2. Dry operation 55
4.4.3. Heating process 57
4.4.4. Defrost operation control 59

4.5. Standard control functions 60

4.5.1. Freezing protection during cooling process or dry operation 60
4.5.2. Protection control (in cooling and dry operation) 61
4.5.3. Compressor operation control 62
4.5.4. Outdoor fan control during cooling operation 64

4.6. Restricted control for Outdoor Units 65

Все каталоги и инструкции здесь: https://splitsystema48.ru/instrukcii-po-ekspluatacii-kondicionerov.html

5. Available optional functions 67
5.1. Outdoor units 68
5.1.1. Setting of external input and output functions 68
5.1.2. Description of external input signals 70
5.1.3. Description of external output signals 73
5.1.4. Optional functions 75
6. Test run 83
6.1. Checking procedure before the test run 84
6.2. Test run procedure from the outdoor unit side 86
6.3. Check list 87
6.4. Judgement systems for refrigerant amount 90
6.4.1. Automatic judgement system for refrigerant amount 90
6.4.2. Simple judgement system for refrigerant amount 91
7. Troubleshooting 93
7.1.2. Emergency operation 95
7.1.3. Failure of the power supply to the indoor unit and the remote control switch 101
7.1.4. Abnormal transmission between the remote control switch and the indoor unit 102
7.1.5. Abnormal operation of the devices 103
7.2. Troubleshooting procedure 111
7.2.1. Alarm code indication of remote control switch 111
7.2.2. Troubleshooting by alarm code 113
7.2.3. Troubleshooting in check mode 158
7.2.4. Troubleshooting by means of the 7 segment display 164
7.2.5. Running current of the compressor 170
7.2.6. Protection control code on the 7-segment display 172
7.2.7. Activating condition of the protection control code 173
7.3. Procedure for checking each main part 175
7.3.1. Self-checking procedure of PCB by means of the Remote Control Switch 175
7.3.2. Self-Checking procedure of the Remote Control Switch 177
7.3.3. Self-Checking procedure of the Indoor Unit PCB (only for RPK) 179
7.3.4. Procedure of checking other main parts 180
8. Spare parts 189
8.1. RAS-8~12FSN2 - Cabinet and fan 190
8.2. RAS-8~12FSN2 - Refrigerant cycle 191
8.3. RAS-8~12FSN2 - Eelectrical equipment 192
8.4. RAS-14~24FSN2 - Cabinet and fan 193
8.5. RAS-14~24FSN2 - Refrigerant cycle 194
8.6. RAS-14~48FSN2 - Electrical equipment 195
8.7. RAS-14~48FSN2 - Electrical equipment 196
9. Servicing 201
9.1.1Outdoor units FSN2 202
9.1.1. Removing air intake grille 202
9.1.2. Removing front service panel 203
9.1.3. Removing fan guard net 204
9.1.4. Removing outdoor fan 205
9.1.5. Removing compressor 207
9.1.6. Replacing return oil circuit (Strainer) 217
9.1.7. Removing high pressure switch, high pressure sensor and low pressure sensor 219
9.1.8. Removing reversing valve and removing reversing valve coil 222
9.1.9. Removing solenoid valve and solenoid valve coil 225
9.1.10. Replacing oil separator, liquid tank and accumulator 229
9.1.11. Removing stop valve 233
9.1.12. Removing expansion valve coil 235
9.1.13. Removing thermistor forliquid pipe 237
9.1.14. Removing thermistor for ambient temperature 239
9.1.15. Removing electrical control box 240
9.1.16. Removing other electrical components 242

Все каталоги и инструкции здесь: https://splitsystema48.ru/instrukcii-po-ekspluatacii-kondicionerov.html

10. Main parts 251
10.1. Inverter 252
10.1.1. Specifications of inverter 252
10.1.2. Inverter time chart 254
10.1.3. Protective Function 255
10.1.4. Overload Control 256
10.2. Thermistor 257
10.2.1. Position of thermistor 257
10.2.2. Resistance value of the thermistor 257
10.3. Electronic expansion valve 260
10.3.1. Electronic expansion valve for the outdoor unit 260
10.4. Pressure sensor 261
10.5. Scroll compressor 262
10.5.1. Reliable mechanism for low vibrating and low sound 262
10.5.2. Principle of compression 262
11. Field work instruction 263
11.1. Checking the power source and the wiring connection 264
11.2. Burnt-out compressor due to an insufficient refrigerant charge 264
11.3. Insufficient cooling performance when a long piping is applied 265
11.4. Alarm Code "31" 265
11.5. Not cooling well due to insufficient installation space for the outdoor unit 266
11.6. Caution with the refrigerant leakage 267
11.6.1. Maximum permissible concentration of the HFC Gas 267
11.6.2. Calculation of the refrigerant concentration 267
11.6.3. Countermeasure for the refrigerant leakage according to the KHK standard 267
11.7. Maintenance work 269
11.7.1. Pump-down method for replacing the compressor 270

Все каталоги и инструкции здесь: https://splitsystema48.ru/instrukcii-po-ekspluatacii-kondicionerov.html

0. Model codes and descriptions

◆ Unit code list

MODEL CODIFICATION	Please check by model name your air conditioner type, its abbreviation and reference number in this service manual.

FSN(2)(E) INDOOR UNITS							
4-Way Cassette		4-Way Mini Cassette		2-Way Cassette		Ceiling	
Unit	Code	Unit	Code	Unit	Code	Unit	Code
RCI-1.0FSN2E	7E400001	RCIM-1.0FSN2	60278011	RCD-1.0FSN2	60278029		
RCI-1.5FSN2E	7E400002	RCIM-1.5FSN2	60278013	RCD-1.5FSN2	60278030		
RCI-2.0FSN2E	7E400003	RCIM-2.0FSN2	60278014	RCD-2.0FSN2	60278031	RPC-2.0FSNE	7E440003
RCI-2.5FSN2E	7E400004			RCD-2.5FSN2	60278032	RPC-2.5FSN2E	7E440004
RCI-3.0FSN2E	7E400005			RCD-3.0FSN2	60278033	RPC-3.0FSN2E	7E440005
RCI-4.0FSN2E	7E400007			RCD-4.0FSN2	60278034	RPC-4.0FSN2E	7E440007
RCI-5.0FSN2E	7E400008			RCD-5.0FSN2	60278035	RPC-5.0FSN2E	7E440008
RCI-6.0FSN2E	7E400009					RPC-6.0FSN2E	7E440009
RCI		RCIM		RCD		RPC	
☀ ❄ 1~							

Meaning of model codification:	RPI	3.0	FS	N	2	E
Unit Type (Indoor Unit RCI(M), RCD, RPC, RPI, RPK, RPF(I))						
Compressor power (HP) 1.0 ~ 6.0						
H-Link Set Free / System Free						
R410 A refrigerant						
Series						
E: Made in Europe - Made in Malaysia						

Все каталоги и инструкции здесь: https://splitsystema48.ru/instrukcii-po-ekspluatacii-kondicionerov.html

FSN(2)(E) INDOOR UNITS									
Duct				Wall		Floor Enclosure		Floor Concealed Enclosure	
Unit	Code	Unit	Code	Unit	Code	Unit	Code	Unit	Code
				RPK-1.0FSNH2M	60277942				
RPI-0.8FSN2E	7E420000	RPIM-0.8FSN2E	7E430000	RPK-1.5FSNH2M	60277942				
RPI-1.0FSN2E	7E420001	RPIM-1.0FSN2E	7E430001	RPK-1.0FSN2M	60277941	RPF-1.0FSN2E	7E450001	RPFI-1.0FSN2E	7E460001
RPI-1.5FSN2E	7E420002	RPIM-1.5FSN2E	7E430002	RPK-1.5FSN2M	60277942	RPF-1.5FSN2E	7E450002	RPFI-1.5FSN2E	7E460002
RPI-2.0FSN2E	7E420003			RPK-2.0FSN2M	60277943	RPF-2.0FSN2E	7E450003	RPFI-2.0FSN2E	7E460003
RPI-2.5FSN2E	7E420004			RPK-2.5FSN2M	60277944	RPF-2.5FSN2E	7E450004	RPFI-2.5FSN2E	7E460004
RPI-3.0FSN2E	7E420005			RPK-3.0FSN2M	60277945	-	-	-	-
RPI-4.0FSN2E	7E420007			RPK-4.0FSN2M	60277946				
RPI-5.0FSN2E	7E420008								
RPI-6.0FSN2E	7E420009								
RPI-8.0FSN2E	7E420010								
RPI-10.0FSN2E	7E420011								
RPI		RPIM		RPK		RPF		RPFI	
❄ ❄1~									

Meaning of model codification:	RPF	2.0	FS	N	2	E
Unit Type (Indoor Unit RCI(M), RCD, RPC, RPI, RPK, RPF(I))						
Compressor power (HP) 1.0 ~ 6.0						
H-Link Set Free / System Free						
R410 A refrigerant						
Series						
E: Made in Europe - Made in Malaysia						

Все каталоги и инструкции здесь: https://splitsystema48.ru/instrukcii-po-ekspluatacii-kondicionerov.html

FSN2 OUTDOOR UNITS							
Unit	Code	Unit	Code	Unit	Code	Unit	Code
RAS-8FSN2	60288134						
RAS-10FSN2	60288135						
RAS-12FSN2	60288136						
		RAS-14FSN2	60288137				
		RAS-16FSN2	60288138				
		RAS-18FSN2	60288139				
		RAS-20FSN2	60288140				
		RAS-22FSN2	60288141				
		RAS-24FSN2	60288142				
				RAS-26FSN2	60288143		
				RAS-28FSN2	60288144		
				RAS-30FSN2	60288145		
				RAS-32FSN2	60288146		
				RAS-34FSN2	60288147		
				RAS-36FSN2	60288148		
				RAS-38FSN2	60288149		
				RAS-40FSN2	60288150		
				RAS-42FSN2	60288151		
						RAS-44FSN2	60288152
						RAS-46FSN2	60288153
						RAS-48FSN2	60288154

Meaning of model codification:	**RAS**	**14**	**FS**	**N**	**2**
Unit Type (Outdoor Unit)					
Compressor power (HP) 8 ~ 48					
Set-Free System					
R410 A refrigerant					
Series					

Все каталоги и инструкции здесь: https://splitsystema48.ru/instrukcii-po-ekspluatacii-kondicionerov.html

◆ Complementary systems

Name	Description	Code	Figure
KPI-502E1E	Energy recovery ventilation units	70600001	
KPI-802E1E		70600002	
KPI-1002E1E		70600003	
KPI-1502E1E		70600004	
KPI-2002E1E		70600005	
KPI-3002H1E		70600107	
EF-5NE	Econofresh kit	7E774148	

◆ List of accessories

Name	Description	Code	Figure
PC-ART	Remote control switch with timer	70510000	
PSC-A64S	Central control	60291479	
PSC-A16RS	Centralized ON/OFF controller	60291484	
PSC-A1T	Programmable timer	60291482	

Все каталоги и инструкции здесь: https://splitsystema48.ru/instrukcii-po-ekspluatacii-kondicionerov.html

Name	Description	Code	Figure
PC-LH3A	Wireless remote control switch	60291056	
PC-ARH	Optional remote controller	60291486	
PC-ALH	Receiver kit (for RCI-FSN2E -on the panel-)	60291464	
PC-ALHD	Receiver kit (for RCD-FSN2· -on the panel-)	60291467	
PC-ALHZ	Receiver kit (for RCI, RCD, RPC, RPI, RPK, RPF(I) -(FSN2(E)) -on the wall-)	60291473	
PC-ALHC	Receiver kit (for RCIM-FSN2 -on the panel-)	60291476	Image not available
PSC-5HR	H-LINK relay	60291105	
PCC-1A	Optional function connector	60199286	
PRC-10E1	2-pin extension cord	7E790211	
PRC-15E1	2-pin extension cord	7E790212	
PRC-20E1	2-pin extension cord	7E790213	
PRC-30E1	2-pin extension cord	7E790214	
THM-R2AE	Remote temperature sensor (THM4)	7E299907	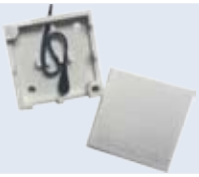
HC-A32MB	Building Management System Gateway to MODBUS systems.	NEW 7E513200	
HC-A16KNX	Building Management System Gateway to KNX systems.	NEW 7E513300	

Все каталоги и инструкции здесь: https://splitsystema48.ru/instrukcii-po-ekspluatacii-kondicionerov.html

Name	Description	Code	Figure
HARC-BXE (A)	Buildin g Management System Gateway to LONWORKS systems. (max. 64 IU, 8 parameters)	60290874	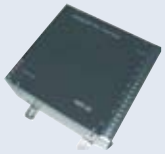
HARC-BXE (B)	Building Management System Gateway to LONWORKS systems. (max. 32 IU, 16 parameters)	60290875	
HC-A64BNP	Building Management System Gateway to BAC Net system.	60291569	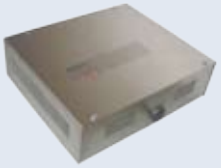
CSNET-WEB (v3)	Control System	7E891938	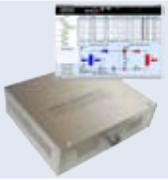
TS001 WEB SCREEN	15-inch touch-screen display	7E891935	
PC-A-1I0	Integration of teams into H-LINK	7E519000	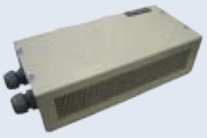
HC-A160SMS	SMS alarm warning device	7E519100	
DBS-26	Drain discharge connection	60299192	
P-N23WA	Air panel for RCI-FSN2E	70530000	
P-N23WAM	Air panel for RCIM-FSN2E	60197160	
P-N23DWA	Air panel for RCD-FSN2E	60291574	
P-N46DWA	Air panel for RCD-FSN2E	60291575	

Все каталоги и инструкции здесь: https://splitsystema48.ru/instrukcii-po-ekspluatacii-kondicionerov.html

Name	Description	Code	Figure
B-23H4	Adapter for deodorant filter	60199790	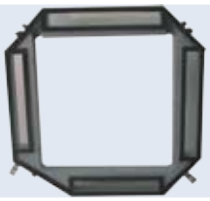
F-23L4-K	Antibacteria filter	60199791	
F-23L4-D	Deodorant filter	60199793	
F-46L4-D	Deodorant filter	60199794	
PDF-23C3	Duct connection flange	60199795	
PDF-46C3	Duct connection flange	60199796	
OACI-232	Fresh-air intake kit	60199797	
PD-75	Fresh-air intake kit	60199798	
PI-23LS5	3-way outlet parts	60199799	
TKCI-232	T-duct connecting kit	60199801	
MW-102AN	Branch pipe	70522001	
MW-162AN		70522002	
MW-242AN		70522004	
MW-302AN		70522005	
MH-84AN	Header	70522007	
MH-108AN		70522008	

Все каталоги и инструкции здесь: https://splitsystema48.ru/instrukcii-po-ekspluatacii-kondicionerov.html

Name	Description	Code	Figure
HR-500	Energy exchanger for KPI (heat recovery)	70550101	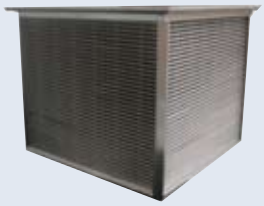
HR-800		70550102	
HR-1000		70550103	
HR-1500		70550104	
HR-2000		70550105	
STL-30-200-L600	Sound attenuator (Heat/energy recovery)	70550200	
STL-30-250-L600		70550201	
STL-30-300-L600		70550202	
STL-30-355-L600		70550203	
STL-30-450-L600		70550204	

Все каталоги и инструкции здесь: https://splitsystema48.ru/instrukcii-po-ekspluatacii-kondicionerov.html

1. Units installation

This chapter provides information about the procedures you must follow to install the Set-Free FSN2 outdoor units.

Contents

1. Units installation ____ 1

1.1 General installation notes ____ 2

1.2 Transportation and handling ____ 4

1.2.1 Hanging method ____ 4

1.2.1 Center of gravity ____ 7

1.3. Outdoor units installation ____ 8

1.3.1 Before installation ____ 8

1.3.2 Installation location ____ 9

1.3.3 Serial units installation ____ 10

1.3.4 Multiple installation space ____ 11

1.3.5. Foundations ____ 15

Все каталоги и инструкции здесь: https://splitsystema48.ru/instrukcii-po-ekspluatacii-kondicionerov.html

1.1 General installation notes

warning

Install the outdoor unit with sufficient clearance around it for operation and maintenance as shown in the next pages.

Install the outdoor unit where good ventilation is available.

Do not install the outdoor unit where exists a high level of oil mist, salty air or sulphurous atmosphere.

Install the outdoor unit as far as practical (being at least 3 meters) from electromagnetic wave radiator, such as medical equipment.

Keep clearance between units of more than 50 mm, and avoid obstacles that could hamper air intake, when installing more than one unit together.

Install the outdoor unit in the shade or not exposed to direct sunshine or direct radiation from high temperature heat source.

Do not install the outdoor unit in a place where a seasonal wind directly blows into the outdoor fan.

For cleaning, use non-inflammable and nontoxic cleaning liquid. Use of inflammable agent may cause explosion or fire.

Work with sufficient ventilation, for working in an enclosed space could cause oxygen deficiency. Toxic gas may be produced when cleaning agent is heated to high temperature by, e.g., being exposed to fire.

Cleaning liquid shall be collected after cleaning.

Pay attention not to clamp cables when attaching the service cover to avoid electric shock or fire.

caution

Check the foundation to be flat, leveled and strongly enough.

Install the unit in a restricted area not accessible by the general public.

Aluminium fins have very sharp edges. Pay attention to the fins in order to avoid injury.

Do not install the indoor units in a flammable environment to avoid a fire or an explosion.

Check to ensure that the ceiling slab is strong enough. If not strong enough, the indoor unit may fall down on you.

Do not install the indoor units, outdoor unit, remote control switch and cable within approximately 3 meters from strong electromagnetic wave radiators, such as medical equipment.

Do not install the indoor units in a machinery shop or kitchen, where vapor from oil or mist flows to the indoor units. The oil will deposit on the heat exchanger, thereby reducing the indoor unit performance, and may deform. In the worst case, the oil damages the plastic parts of the indoor unit.

To avoid any corrosive action to the heat exchangers, do not install the indoor units in an acid or alkaline environment.

When lifting or moving the indoor unit, use appropriate slings to avoid damage and be careful not to damage the insulation material on units surface.

This appliances are not intended for use by people (including children) with reduced physical, sensory or mental capabilities, or lack of experience and knowledge, unless they have been given supervision and instruction concerning the use of the appliance by a person responsible for their safety.

Turn OFF all power switches before maintenance is performed.

Do not start the cleaning procedures before 5 minutes of the stop of the unit.

warning

Check and ensure that the accessories are packed with the indoor unit.

Do not install the indoor units outdoors. If installed outdoors, an electric hazard or electric leakage will occur.

Consider the air distribution from each indoor unit to the space of the room, and select a suitable location so that uniform air temperature in the room can be obtained. It is recommended that the indoor units be installed 2.3 to 3 meters from the floor level. If the unit is installed higher than 3 meters, it is also recommended to use a fan in order to obtain an uniform air temperature in the room.

Avoid obstacles which may hamper the air intake or the air discharge flow.

Children must be supervised to ensure that they do not play with the electrical appliances.

Before obtaining access to terminals, all supply circuits bust be disconnected.

Все каталоги и инструкции здесь: https://splitsystema48.ru/instrukcii-po-ekspluatacii-kondicionerov.html

1

warning

Pay attention to the following points when the indoor units are installed in a hospital or other places where there are electronic waves from medical equipment and similar.

Do not install the indoor units where electromagnetic wave is directly radiated to the electrical box, remote control cable or remote control switch.

Install the indoor units and components as far as practical or at least 3 meters from the electromagnetic wave radiator.

Prepare a steel box and install the remote control switch in it. Prepare a steel conduit tube and wire the remote control cable in it. Then connect the ground wire with the box and tube.

Install a noise filter when the power supply emits harmful noises.

This unit is exclusive non electrical heater type indoor unit. It is prohibited to install a electrical heater in the field.

Mount suspension bolts using M10 (W3/8) as size, as shown below:

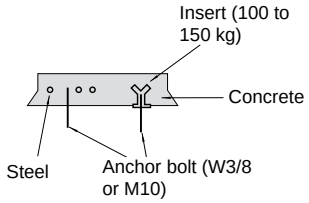

Concrete Beam

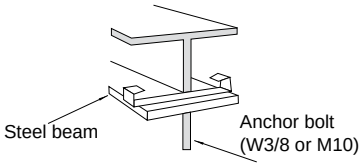

Steel Beam

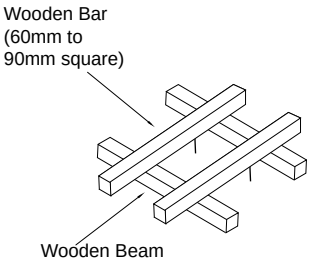

Wooden Beam

Do not put any foreign material into the indoor unit and check to ensure that none exist in the indoor unit before the installation and test running. Otherwise a fire or failure may occur.

Note

Hitachi indoor units are designed for free air discharge (Static Pressure, Pst=0), except ducted indoor units as RPIM, which require to be connected to discharge air ducts. For these units see flow-static pressure chart.

Все каталоги и инструкции здесь: https://splitsystema48.ru/instrukcii-po-ekspluatacii-kondicionerov.html

1.2 Transportation and handling

Transport the product as close to installation location as practical before unpacking.

	caution
- *Do not put any material on the product.*	

1.2.1 Hanging method

When hanging the unit, ensure a balance of the unit, check safety and lift up smoothly.

- **For transportation**
- Do not remove any packing materials.
- Hang the unit without removing the packaging with ropes through each square hole and apply the splints or corrugated paper for unit protection

	DANGER
- *Do not tie ropes at the wooden base..*	

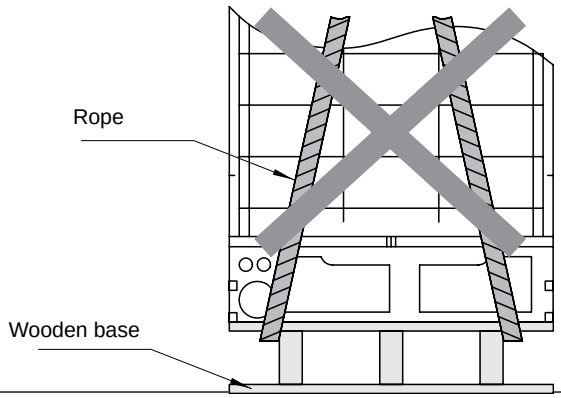

Все каталоги и инструкции здесь: https://splitsystema48.ru/instrukcii-po-ekspluatacii-kondicionerov.html

1

- **For installation RAS-(8~12)FSN2**

- Remove the wooden base.
- Apply two (2) ropes on the splints or corrugated paper to protect the unit, and hang the unit as shown below

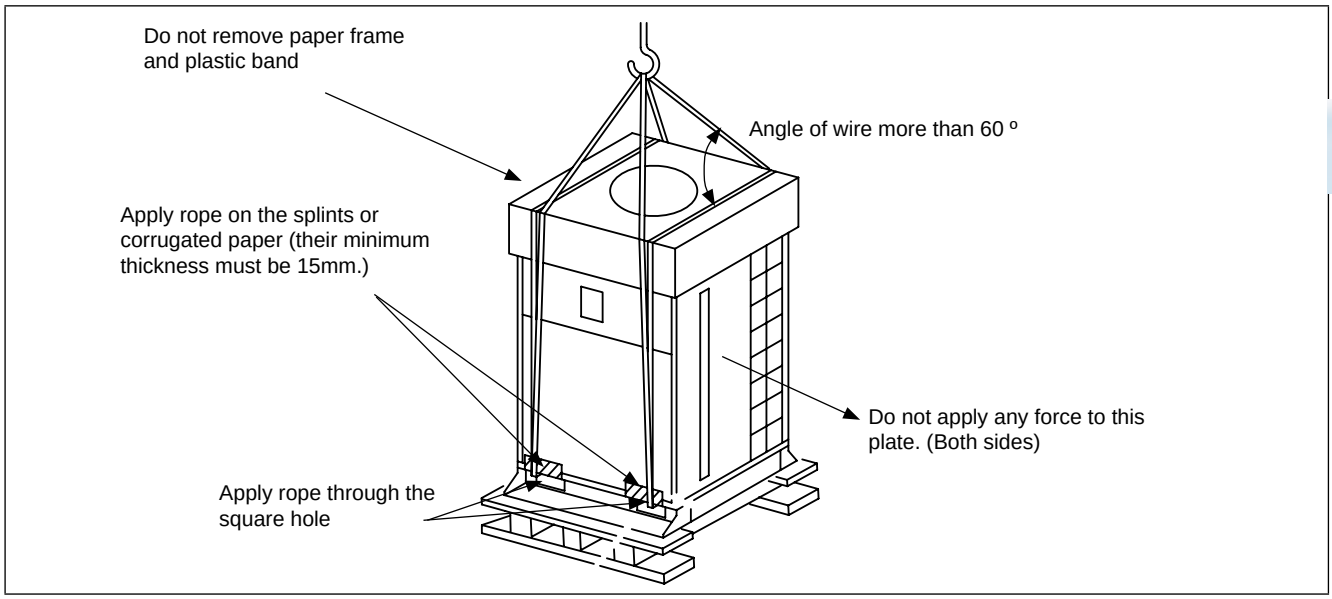

(Rope position)

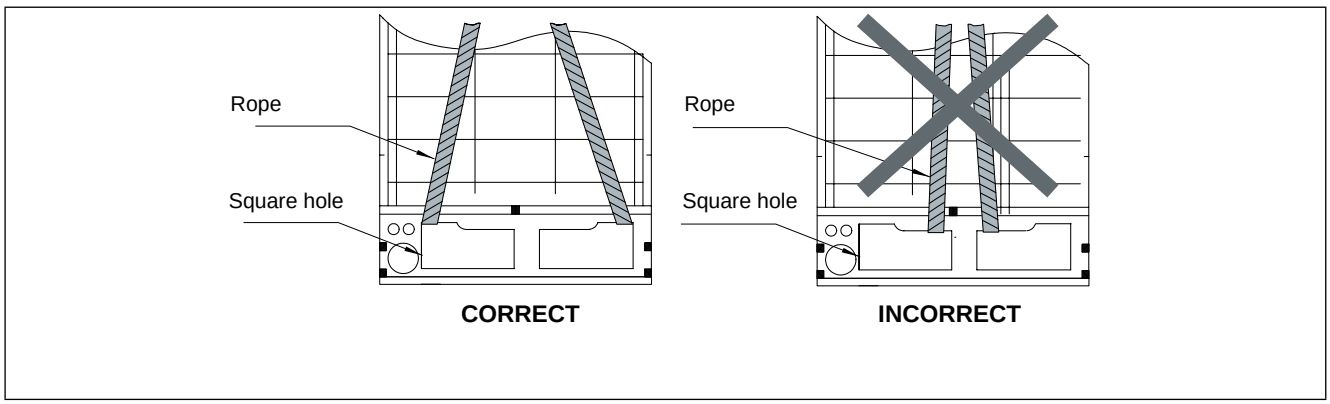

- **For installation RAS-(14~24)FSN2**

- Hang the unit without removing the packaging with four (4) ropes. Push through the wire ropes into the hang hole and clamp the wires by using shackle as shown below.

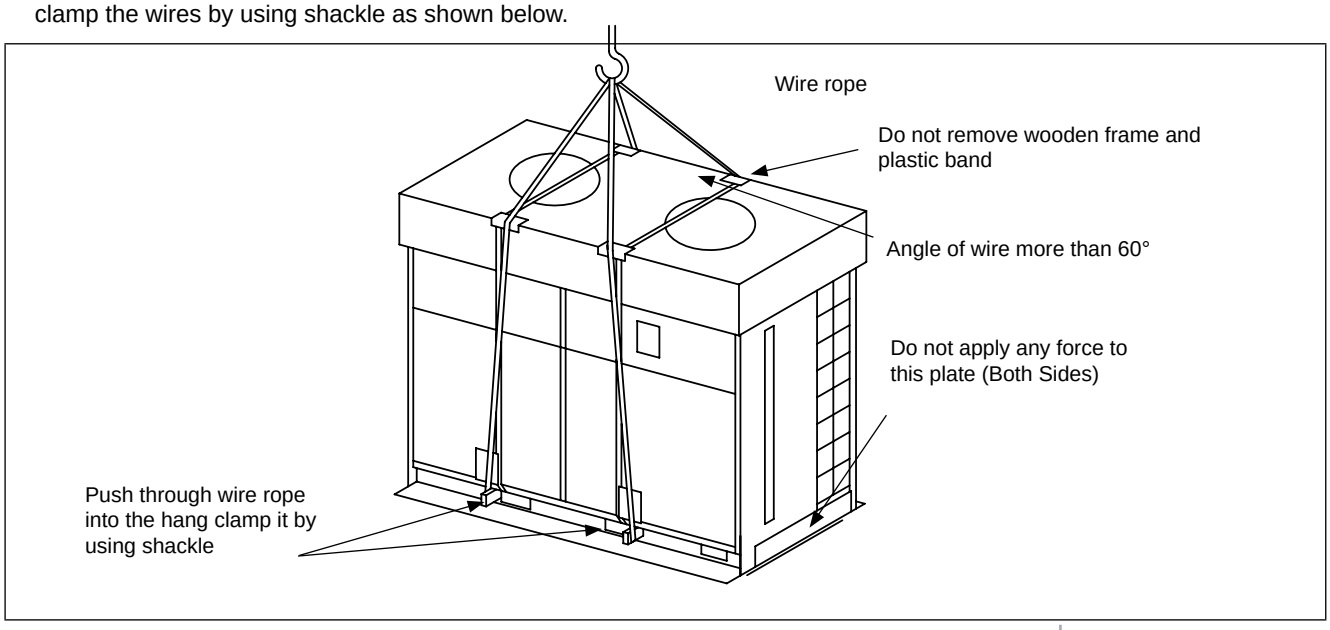

Все каталоги и инструкции здесь: https://splitsystema48.ru/instrukcii-po-ekspluatacii-kondicionerov.html

- **For installation RAS-(26~42)FSN2**

- Hang the unit without removing the packaging with four (4) ropes. Push through the wire ropes into the hang hole and clamp the wires by using shackle as shown below.

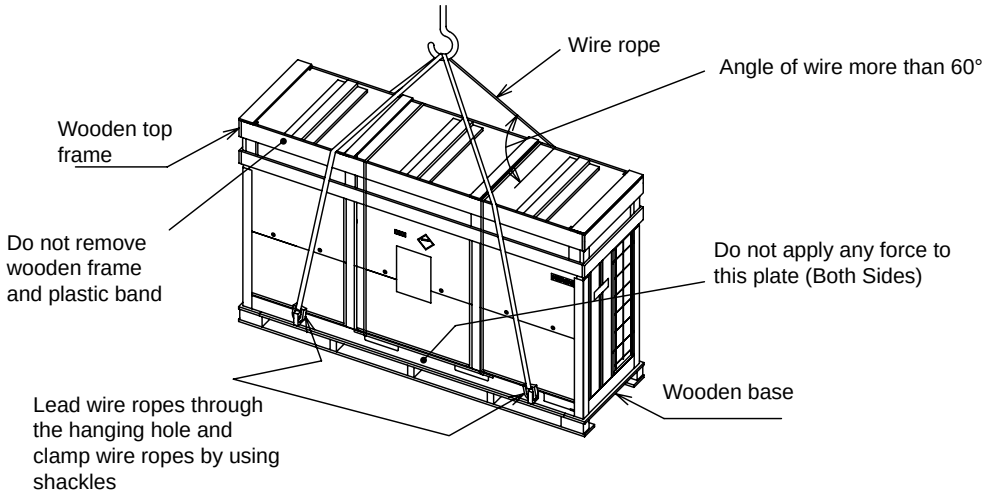

- **For installation RAS(44~48)FSN2**

- Hang the unit without removing the packaging with four (4) ropes. Push through the wire ropes into the hang hole and clamp the wires by using shackle as shown below.

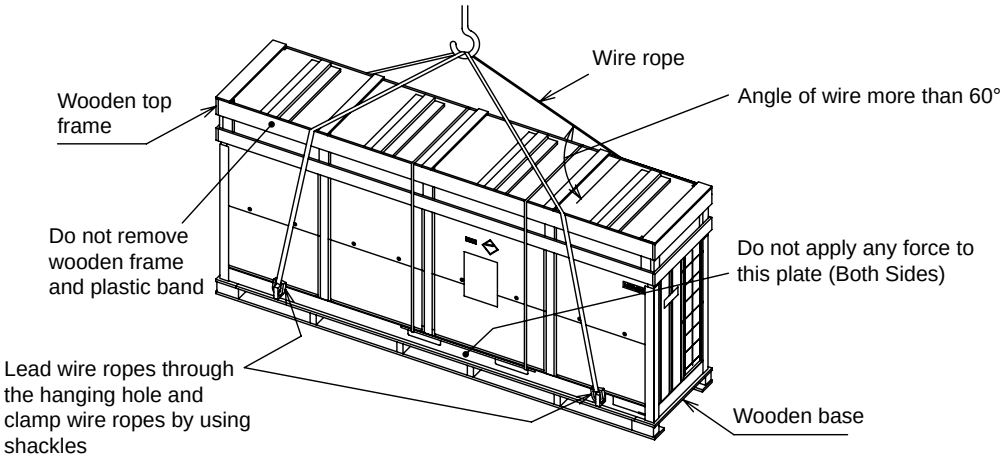

NOTES

- *In case of transportation after removing wooden base, hang the unit as shown in figures above.*
- *In case of transportation after unpacking, protect the unit with the splints or cloth.*

WARNING

- *Do not put any foreing material into the outdoor unit and check to ensure that none exists in the outdoor unit before the installation and test run. Otherwisea fire or failure etc. may occur.*

Все каталоги и инструкции здесь: https://splitsystema48.ru/instrukcii-po-ekspluatacii-kondicionerov.html

1.2.1 Center of gravity

- **When using handles**
  When manually lifting the unit using the handles, pay attention to the following: do not remove the wooden base from outdoor unit to prevent it from overturning, paying attention to the center of gravity as shown in the below figure. Two persons are needed to move this unit.

■ FSN2

Model: RAS-8-12FSN2

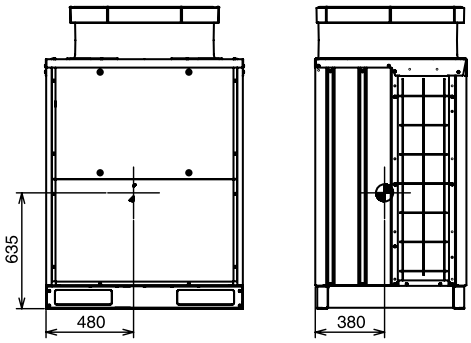

Model: RAS-14-24FSN2

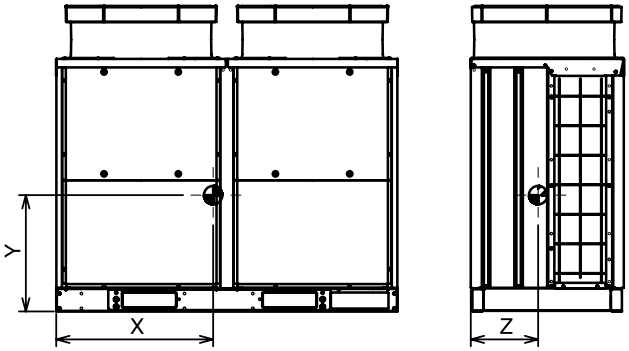

Model	Dimension		
	X	Y	Z
RAS-14/16FSN2	850	630	365
RAS-18/20FSN2	780	605	345
RAS-22/24FSN2	755	600	335

Model: RAS-26-42FSN2

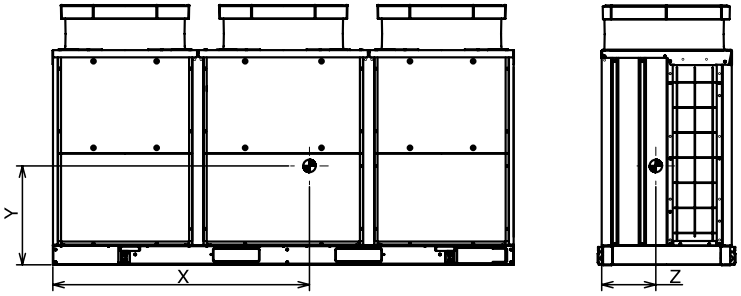

Model	Dimension		
	X	Y	Z
RAS-26/28FSN2	1635	630	345
RAS-30/36FSN2	1575	615	340
RAS-38/42FSN2	1465	600	325

Model: RAS-44-48FSN2

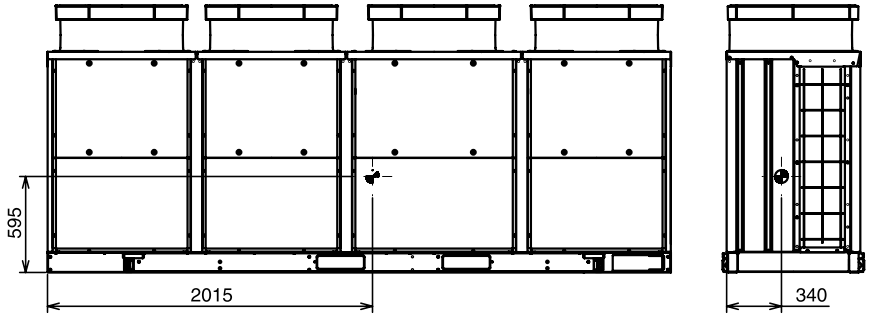

Все каталоги и инструкции здесь: https://splitsystema48.ru/instrukcii-po-ekspluatacii-kondicionerov.html

1.3. Outdoor units installation

WARNING

- *Install the outdoor unit with sufficient clearance around it for operation and maintenance as shown in the next figures.*
- *Install the outdoor unit where good ventilation is available*
- *Do not install the outdoor unit where is a high level of oil mist, salty air or sulphurous atmosphere.*
- *Install the outdoor unit as far as practical (being at least 3 meters) from electromagnetic wave radiator (such as medical equipment).*
- *Keep clearance between the units of more than 50 mm, and avoid obstacles that may hamper air intake, when installing more than one units together.*
- *Install the outdoor unit in the shade or not exposed to direct sunshine or direct radiation from high temperature heat source.*

CAUTION

- *Check to ensure that the foundation is flat, level and sufficiently strong.*
- *Install the unit in a restricted area not accessible by the general public*
- *Aluminum fins have very sharp edges. Pay attention to the fins to avoid injury.*

CAUTION

Pay attention to the followings to run through the cables under the unit using conduit for piping and wiring works. (The pipe cover is required to remove before performing piping and wiring works.)

1. Attach the pipe cover to avoid entering rats or other small animals into the unit.

2. Completely seal the conduit inlet with sealing materials.

3. Make a drain hole at the lowest part of the conduit.

1.3.1 Before installation

Before installation work, check the availability of the following parts that are packed inside the outdoor unit

Accessory	Quantity	Purpose
Flange gasket	1	Connection for refrigerant gas piping with RAS-10FSN2 to RAS-48FSN2
Pipe flange of refrigerant gas piping	1	
Pipe with flare nut for refrigerant gas piping (Ø19.05)	1	Connection for refrigerant gas piping with RAS-8FSN2
Pipe with flare nut for refrigerant liquid piping (Ø19.05)	1	Connection for refrigerant liquid piping with RAS-26FSN2 to RAS-48FSN2
Rubber Bush	2	For connection hole of operation wiring
	1	For connection hole of power source wiring
Screw	3	Spare

Все каталоги и инструкции здесь: https://splitsystema48.ru/instrukcii-po-ekspluatacii-kondicionerov.html

1.3.2 Installation location

■ Installation place

– Install the outdoor unit with a sufficient space around the outdoor unit for operation and maintenance as shown

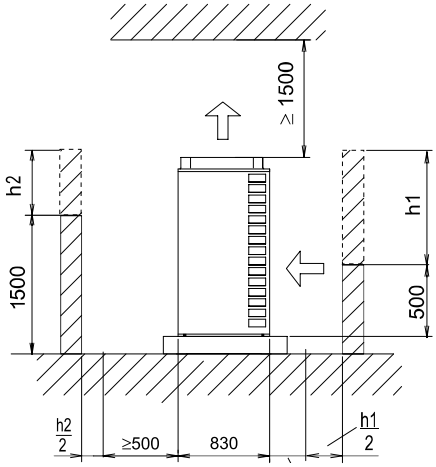

– In case of no walls at the front and the rear side of the unit, the space of 500mm for the front side and 300mm for the rear side is required .

– When the front wall height is Min. 1,500mm, extend the distance to the wall more than (500+ h2/2) .
When the rear wall height is Min. 500mm, extend the distance to the wall more than (300+h1/2) .

– When the distance to the obstacle above the unit is Max. 1,500mm or the space above the unit is closed, set up the duct at the air outlet to prevent the short-circuit .

– When there are walls around the unit, make the vent hole on the wall .

– When there are obstacles above the unit, the four (front, rear, right and left) sides of the unit shall be open in principle .

– Install the outdoor unit in a dry well ventilated environment .

– Install the outdoor unit where the sound or the discharge air from the outdoor unit does not affect neighbors or surrounding ventilation. The operating sound at the rear or right/left sides is 3 to 6dB(A) higher than the value in the catalog at the front side .

– Check to ensure that the foundation is flat, level and sufficiently strong .

– Do not install the outdoor unit where there is a high level of oil mist, flammable gases, salty air or harmful gases such as sulphur and an acid or alkaline environment .

– Do not install the outdoor unit where the electromagnetic wave is directly radiated to the electrical control box .

– Install the outdoor unit as far as possible, being at least 3 meters from the electromagnetic wave radiator .

– When installing the outdoor unit in snow-covered areas, mount the field-supplied hoods on the top of the outdoor unit and the inlet side of the heat exchanger.

– Install the outdoor unit where it is in the shade or it will not be exposed to direct sunshine or direct radiation from high temperature heat source .

– Do not install the outdoor unit where dust or other contamination could block the outdoor heat exchanger .

– Install the outdoor unit in a space with limited access to general public .

– Do not install the outdoor unit in a space where a seasonal wind directly blows to the outdoor heat exchanger or a wind from a building space directly blows to the outdoor fan .

CAUTION
Aluminum fins have very sharp edges. Pay attention to the fins in order to avoid any injury.

NOTE
Install the outdoor unit on a roof or in an area where people, except service engineers, cannot touch the outdoor unit

Installation space for single unit

a) Front side wall height: < 1500 mm
Rear side wall height: < 500 mm

b) Front side wall height: > 1500 mm

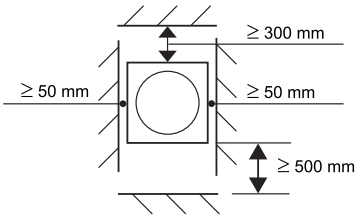

Rear side wall height: > 500 mm

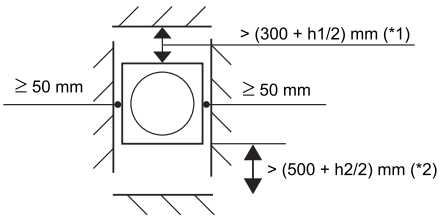

*1): h1 = Rear side wall height - 500 mm

*2): h2 = Front side wall height - 500 mm

Все каталоги и инструкции здесь: https://splitsystema48.ru/instrukcii-po-ekspluatacii-kondicionerov.html

1.3.3 Serial units installation

In case that the front and either of the sides are open.

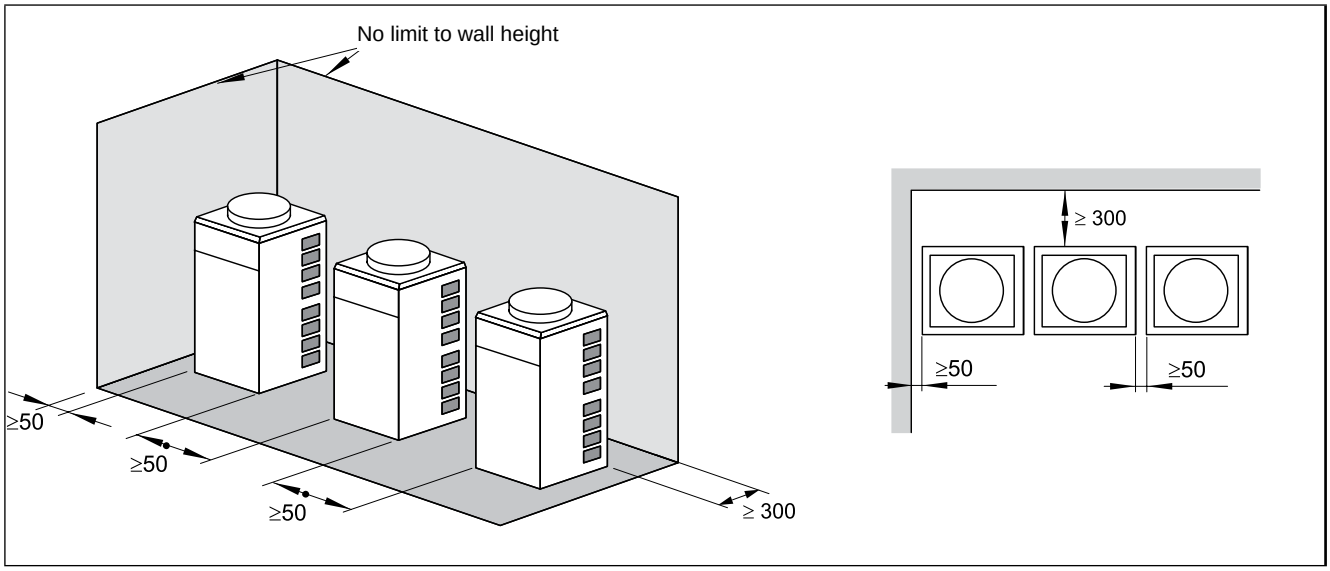

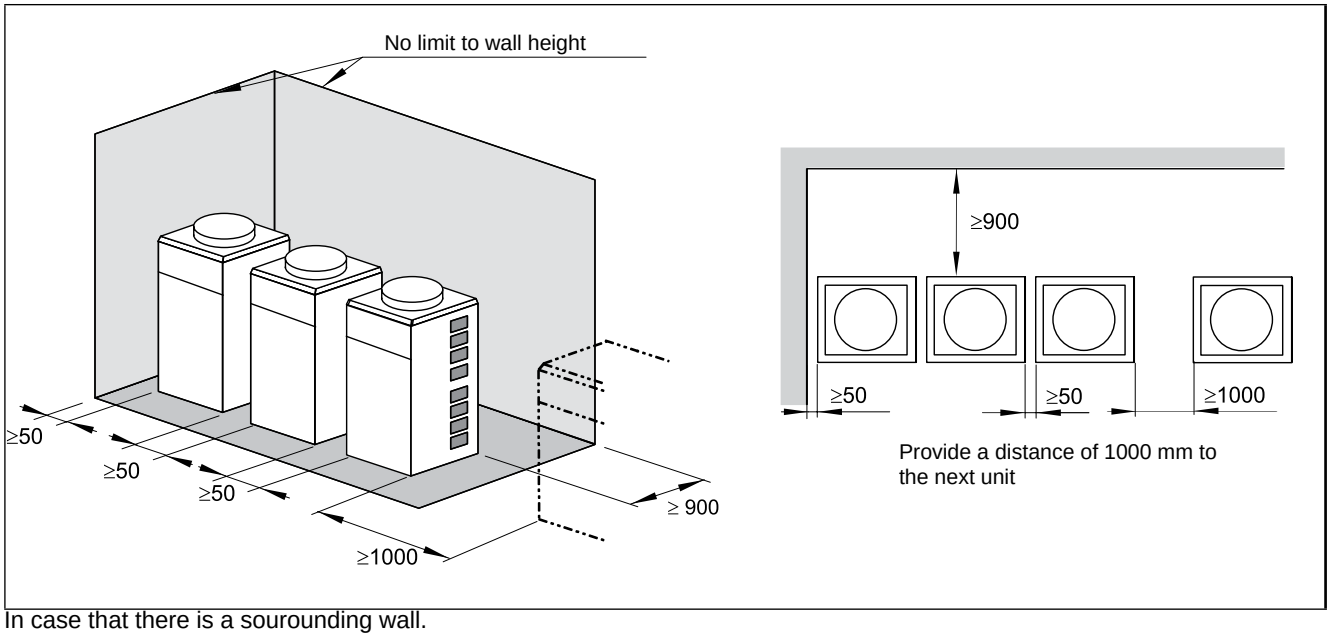

In case that there is a sourounding wall.

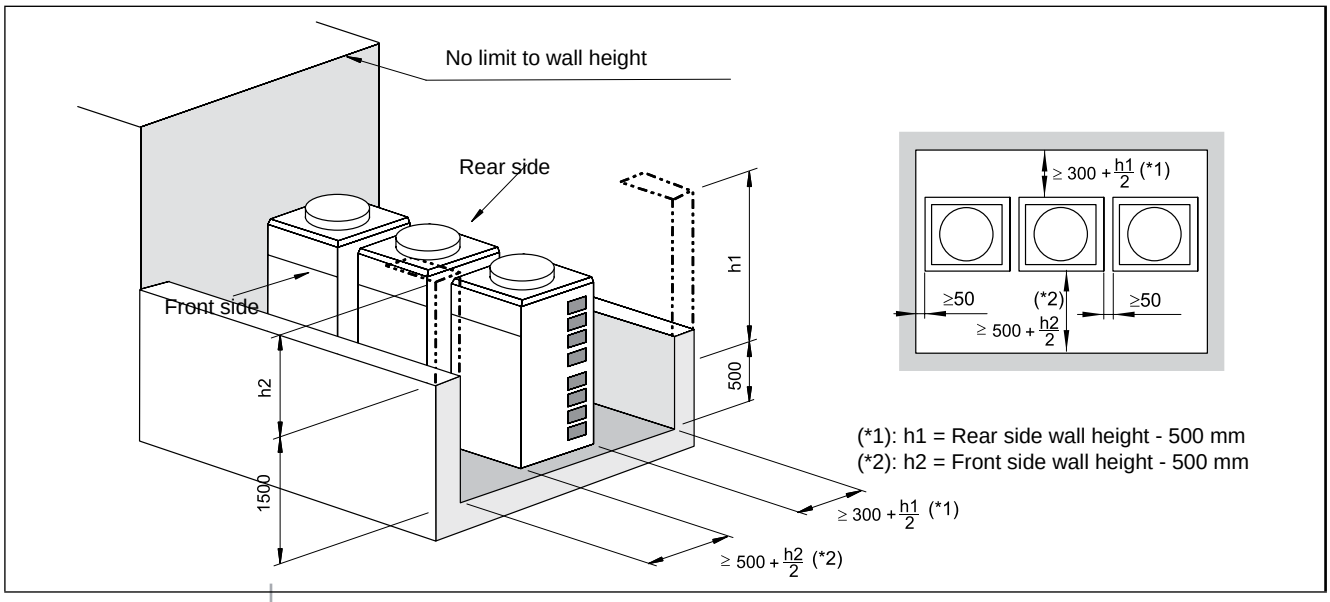

Все каталоги и инструкции здесь: https://splitsystema48.ru/instrukcii-po-ekspluatacii-kondicionerov.html

1.3.4 Multiple installation space

Keep the upper side open to prevent air short-circuiting.

– In case that the front and either of the sides are open.

- Installation in the same direction

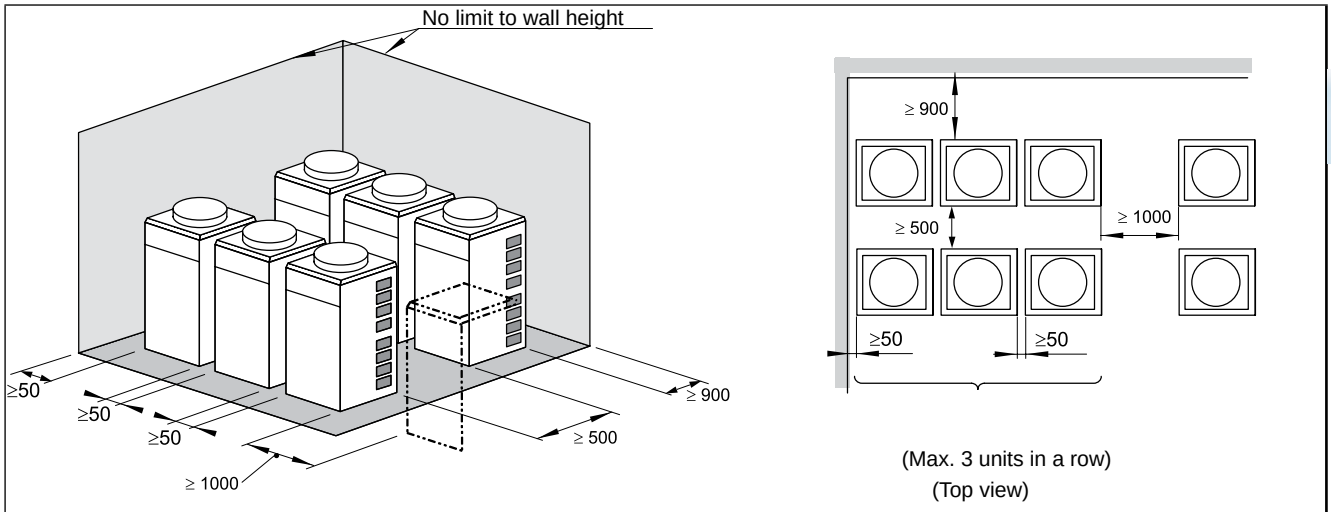

Provide a distance of min. 1000 mm to the next unit

– Rear to rear installation

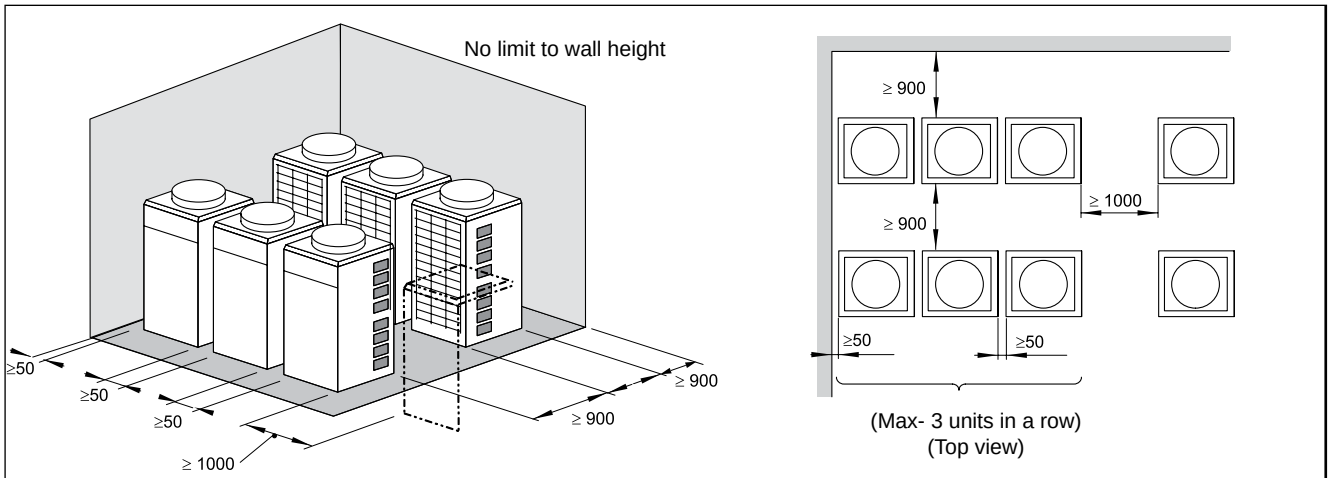

Provide a distance of min. 1000 mm to the next unit

■ In case that there is a surrounding wall.

- Installation in the same direction

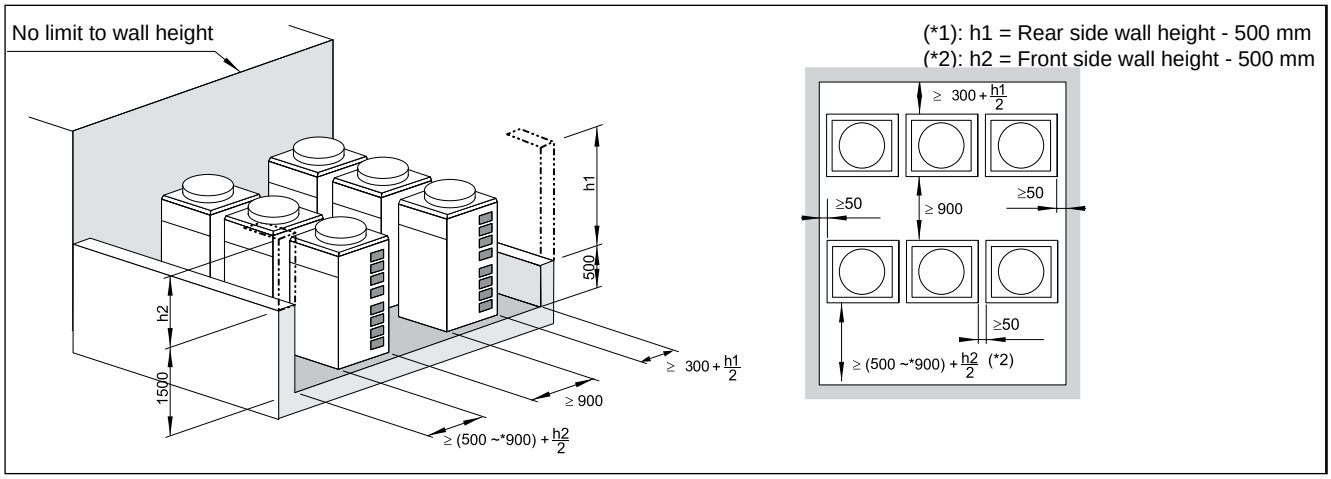

Все каталоги и инструкции здесь: https://splitsystema48.ru/instrukcii-po-ekspluatacii-kondicionerov.html

– Rear to rear installation (case 1)

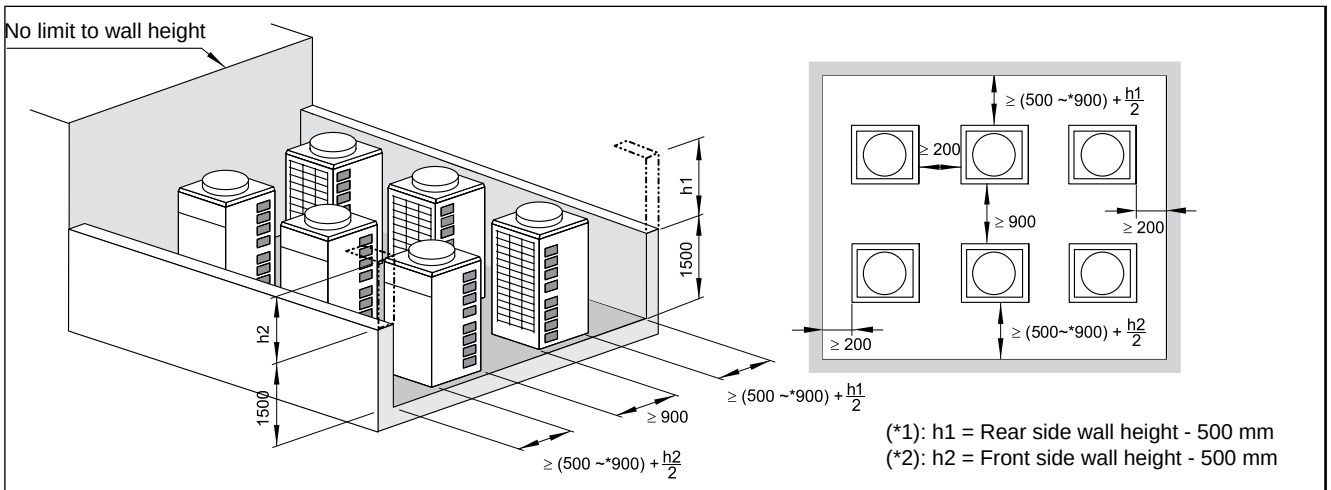

* A space of 900 mm is recommended for easier service work

– Rear to rear installation (case 2)

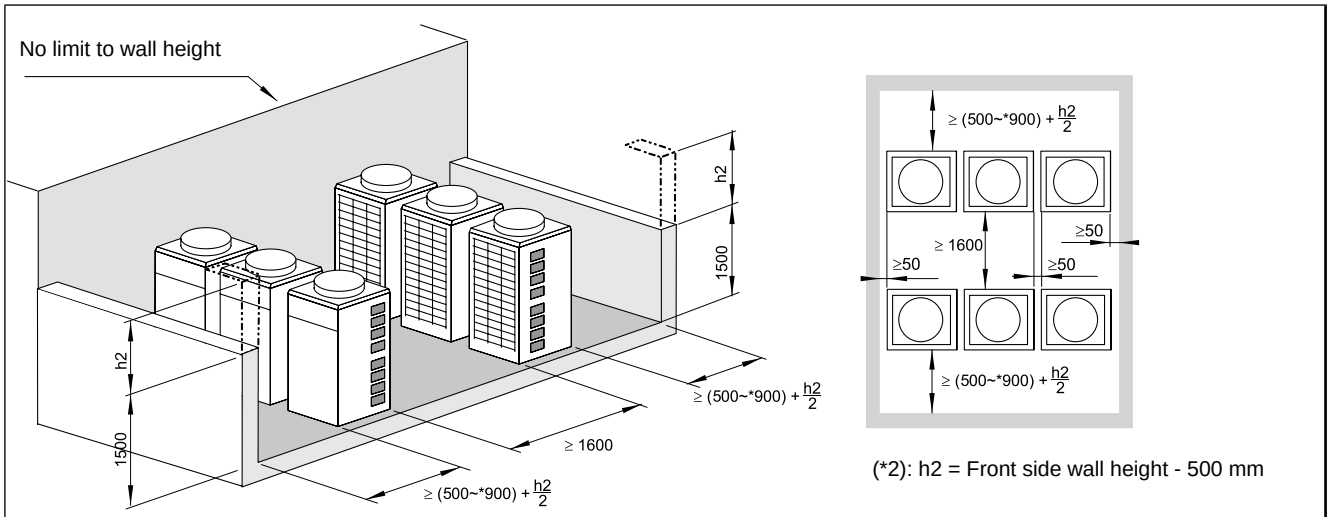

* A space of 900 mm is recommended for easier service work

– Rear to rear installation (case3)

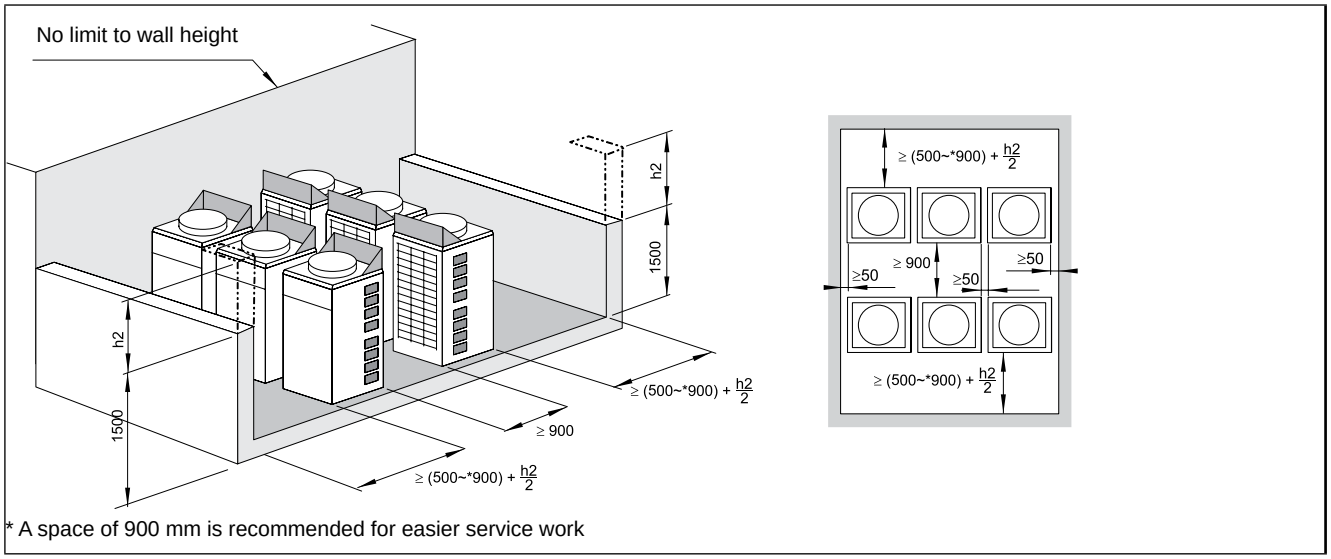

* A space of 900 mm is recommended for easier service work

Все каталоги и инструкции здесь: https://splitsystema48.ru/instrukcii-po-ekspluatacii-kondicionerov.html

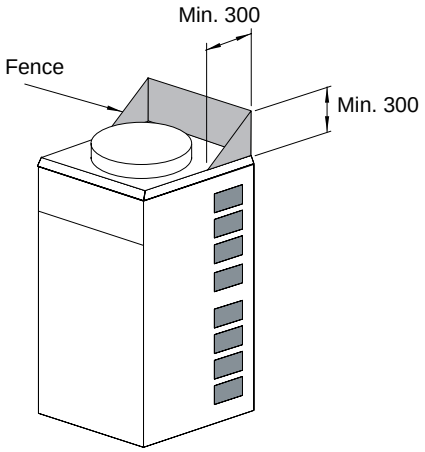

Note:

– In case that the rear space is less than 1600 mm and the side space is less than 400 mm, apply a field-supplied fence for each unit.

Other models:

Model	Number of cabinets
RAS-8~12FSN2	1
RAS-14~24FSN2	2
RAS-26~42FSN2	3
RAS-44~48FSN2	3

Note:

– For other models, the service space is the same as for 1 cabinet. See the table for the number of cabinets according to the Outdoor Unit model.

Все каталоги и инструкции здесь: https://splitsystema48.ru/instrukcii-po-ekspluatacii-kondicionerov.html

■ **Consideration to Seasonal Wind**

Avoid the installation that the air intake side (Rear) of the unit is faced directly against a seasonal strong wind.

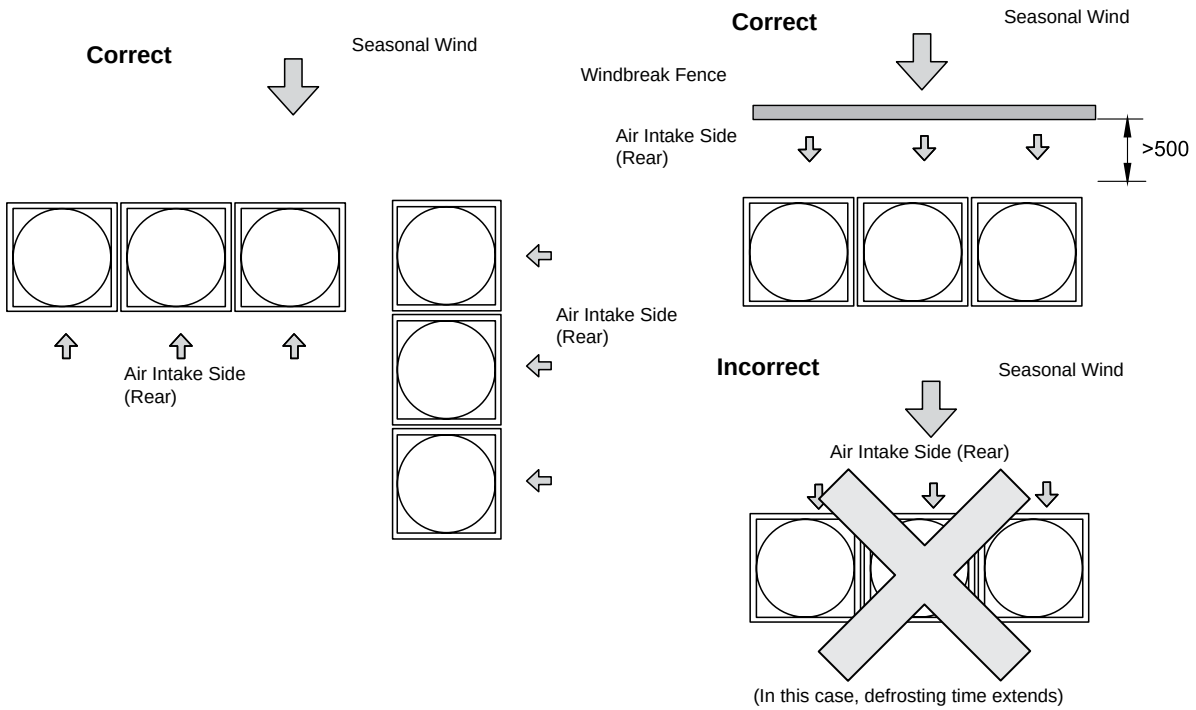

■ **Consideration to Snow**

Apply an air discharge hood, an air intake hood and a higher foundation to prevent accumulation of snow on the air outlet and air inlet.

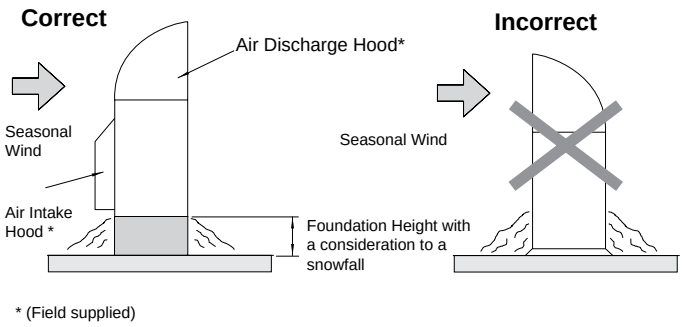

■ **Prevention of Short-circuiting**

For prevention of short-circuiting between suction air and discharge air, apply a field-supplied air discharge hood

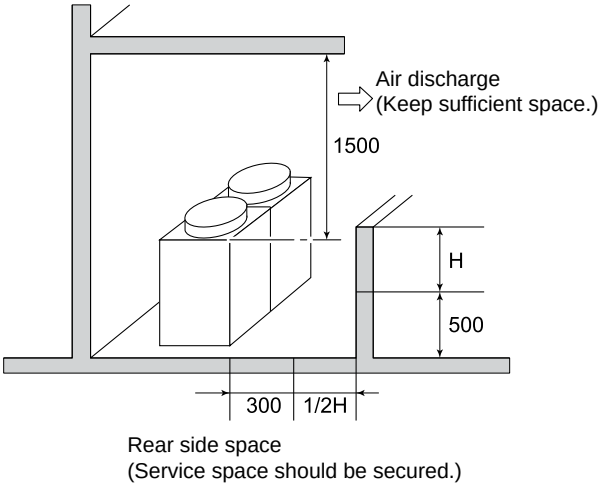

NOTE:

Install the unit on a sunny place such as east or southside of the building rather than north side.

Все каталоги и инструкции здесь: https://splitsystema48.ru/instrukcii-po-ekspluatacii-kondicionerov.html

1.3.5. Foundations

■ **Concrete foundations**

1 The height of the foundation should be 100 to 300mm higher than the ground level.

2 Install a drainage around foundation for smooth drain.

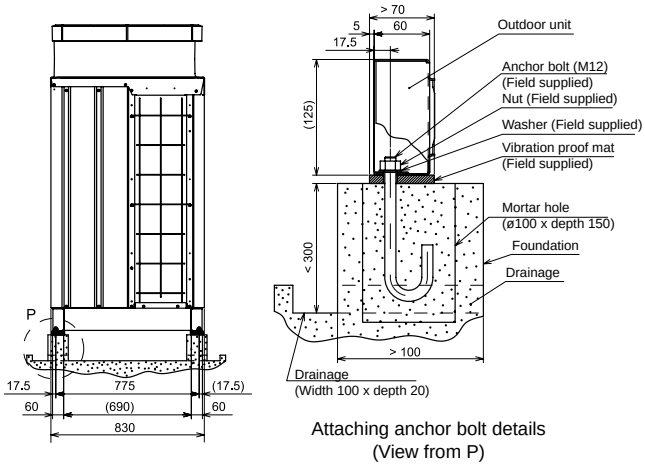

Attaching anchor bolt details
(View from P)

CORRECT	INCORRECT
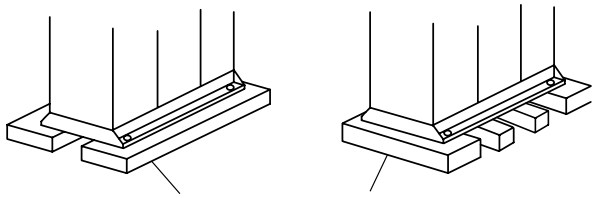	

Foundation

3 Install the outdoor unit in the front-rear and right-left direction horizontally.

Check to ensure that the gradient in four directions (front, rear, right and left) is within 10mm.

4 Provide a strong and correct foundation so that;

a The outdoor unit is not on an incline.

b Abnormal sound does not occur.

c The outdoor unit will not fall down due to a strong wind or earthquake.

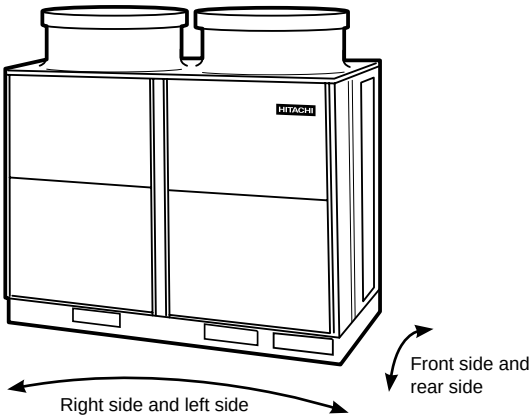

Все каталоги и инструкции здесь: https://splitsystema48.ru/instrukcii-po-ekspluatacii-kondicionerov.html

■ Drain water treatement

While heating or defrosting operation, drain water is discharged. Provide adequate drainage around the foundation. If installing the unit on a roof or a veranda, avoid draining in or over walkways to prevent water dripping on people or the formation of ice in winter. In case of installing such a place, provide the additional drainage around the foundation.

■ Position of anchor bolts

When installing the outdoor unit, fix the unit by anchor bolts. Refer to figure below regarding the location of fixing holes.

Model: RAS-8~12FSN2

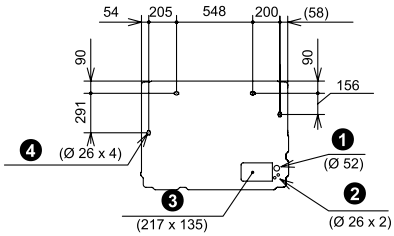

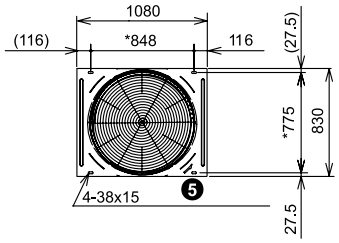

Model: RAS-14~24FSN2

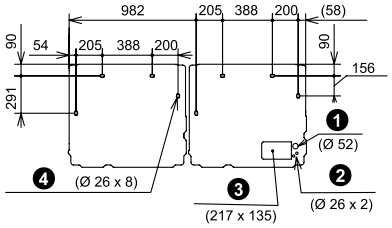

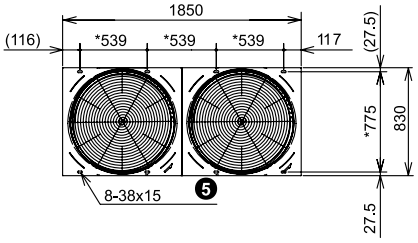

Model: RAS-26~42FSN2

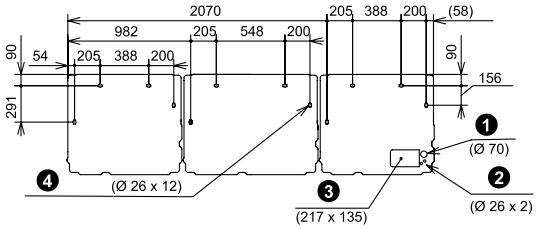

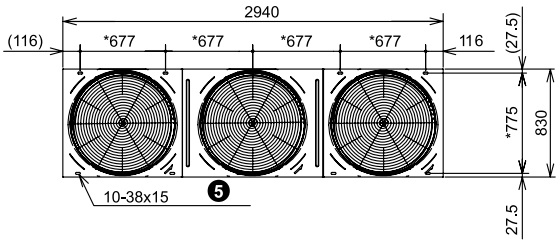

Model: RAS-44~48FSN2

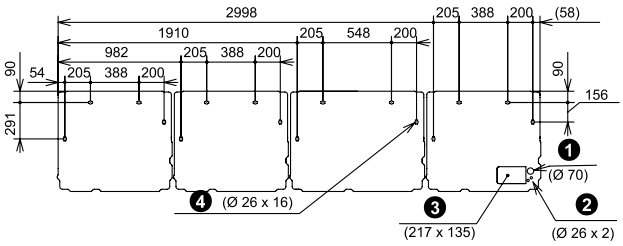

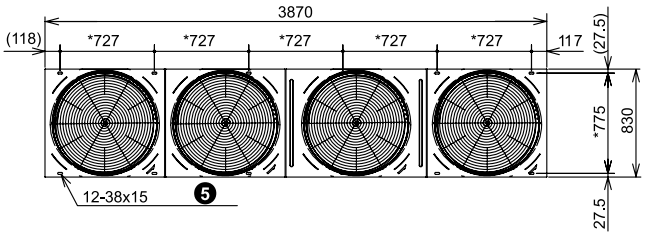

❶	Power source connection
❷	Control circuit connection
❸	Refrigerant piping connection
❹	Drain hole (Drain boss position (option))

❺	Hole of anchor bolt (M12)
*	The dimensions marked with * indicates the mounting pitch dimension for anchor bolts.

Все каталоги и инструкции здесь: https://splitsystema48.ru/instrukcii-po-ekspluatacii-kondicionerov.html

2. Piping installation

Contents

2. Piping installation ____ 17
2.1. Piping work considerations ____ 18
2.1.1 Copper pipes and sizes ____ 18
2.1.2 Three principles on refrigerant piping work ____ 21
2.1.3 Suspension of refrigerant piping ____ 21
2.1.4. Tightening torque ____ 22
2.1.5. Brazing work ____ 23
2.2. Outdoor units piping installation ____ 24
2.2.1. Factory supplied accessories ____ 24
2.2.2. Position of piping connections ____ 25
2.2.3. Flange piping connection ____ 26
2.2.4. Piping connection ____ 27
2.2.5 Vacuum and refrigerant charge ____ 28
2.2.6. Drain discharging boss ____ 30

Все каталоги и инструкции здесь: https://splitsystema48.ru/instrukcii-po-ekspluatacii-kondicionerov.html

2.1. Piping work considerations

2.1.1 Copper pipes and sizes

1. Prepare locally-supplied copper pipes.
2. Select the piping size with the correct thickness and correct material which can have sufficient pressure strength. Use the table below to select the required pipe.

Nominal Diameter		Thickness (mm)	Copper type
(mm)	(in)		
6.35	1/4	0.80	Roll
9.53	3/8	0.80	Roll
12.70	1/2	0.80	Roll
15.88	5/8	1.00	Roll
19.05	3/4	1.00	Pipe
22.23	7/8	1.00	Pipe
25.40	1	1.00	Pipe
28.60	1 1/8	1.00	Pipe
31.75	1 1/4	1.10	Pipe
34.93	1 3/8	1.25	Pipe
38.10	1 1/2	1.35	Pipe
41.28	1 5/8	1.20	Pipe
44.45	1 3/4	1.55	Pipe

Note

- *In case of using copper pipes for piping sections bigger than Ø 19.05 mm (3/4 inches), flaring work cannot be performed. If necessary, use a joint adapter.*

3. Select clean copper pipes. Make sure there is not dust and moisture inside. Blow the inside of the pipes with oxygen free nitrogen to remove any dust and foreign materials before connecting the pipes.
4. After connecting the refrigerant piping, seal the open space between Knockout hole and refrigerant pipes by using insulation material as shown below:

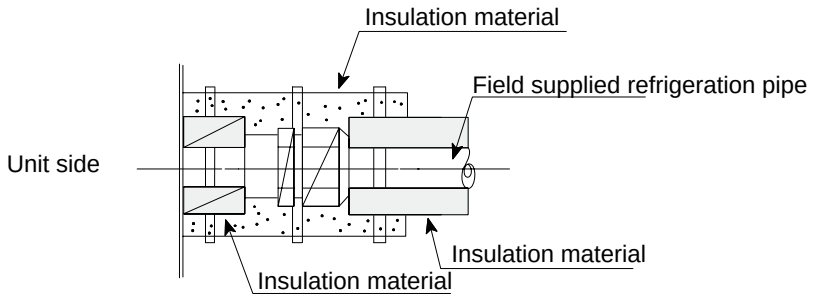

caution

- *Do not use a saw and a grindstone or other tools which cause copper powder.*
- *When cutting pipes, secure the part for brazing in accordance with both national and local regulations.*
- *Use security glasses and gloves for cutting or welding works.*

Все каталоги и инструкции здесь: https://splitsystema48.ru/instrukcii-po-ekspluatacii-kondicionerov.html

Piping Connection

When connecting liquid piping for units with piping longer than 15 meters, apply a piping size of Ø9.53 mm (3/8 inches).

Fix the connecting pipe as shown in the following figure using the insulation attached to the Indoor Unit.

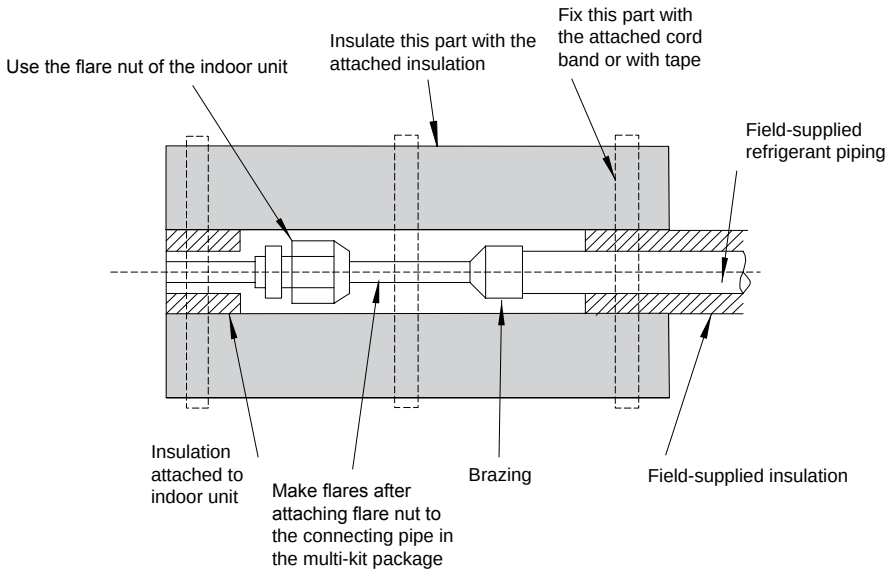

2

	Note

- *A system with no moisture or oil contamination will give maximum performance and lifecycle compared to a poorly prepared system. Take particular care to ensure that all copper piping is clean and dry internally.*
- *To ensure this, blow oxygen-free nitrogen through the pipes.*

	caution

- *When inserting a pipe through any hole protect the end with a cap.*
- *Do not put pipes on the ground directly without a cap or vinyl tape at the end of the pipe*
- *If the piping installation is not completed until the next day or even over a longer period of time, braze off the ends of the piping and charge the pipe with oxygen-free nitrogen through a Schrader-valve-type access-fitting, to prevent moisture and particle contamination entering.*
- *Do not use insulation material that contents NH3. NH3 can damage the cooper pipe material and can be a source of future leakages*

Correct	Incorrect
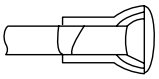	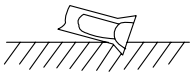

Все каталоги и инструкции здесь: https://splitsystema48.ru/instrukcii-po-ekspluatacii-kondicionerov.html

- **Insulation**
  Attach the pipe insulation to each branch using vinyl tape. Attach also insulation to field supplied pipes in order to prevent the capacity decrease according to the ambient air conditions and dewing on the low pressure pipe surface.

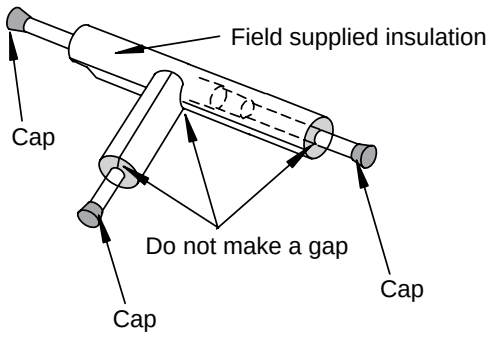

	Note
- *When polyethylene foam is applied, it is recommended the usage of a wall thickness of 10 mm for the liquid piping and 15 mm to 20 mm for the gas piping.*	

	caution
- *Perform the insulation work after the pipe surface temperature decreases to the room temperature, if not the insulation material may melt.* - *If the ends of the piping system are open after ending the piping work, attach caps or vinyl bags securely to the ends of the piping, avoiding moisture and dust entering.*	

Все каталоги и инструкции здесь: https://splitsystema48.ru/instrukcii-po-ekspluatacii-kondicionerov.html

2.1.2 Three principles on refrigerant piping work

In case of using refrigerant R410A in the refrigeration cycle, the refrigeration oil should be of a synthetic type one.
In order to avoid oxidation, pay much careful attention to basic piping work control to avoid infiltration of moisture or dust during the refrigerant piping work.

Three principles	Cause of failure	Presumable failure	Preventive action
1. Dry Keep good dryness	- Water infiltration due to insufficient protection at pipe ends - Dewing inside of pipes - Insufficient vacuum pumping time	Icing inside tube at ex. valve (Water choking) + Generation of hydration and oxidation of oil ↓ Clogged Strainer, etc., insulation failure and compressor failure	Pipe protection 1 Pinching 2 Taping ↓ Flushing ↓ Vacuum Drying - One gram of water turns into gas (approx. 1000 lrs) at 1 Torr - Therefore, it takes long time to vacuum-pump by a small vacuum pump
2. Clean No dust Inside of pipes	- Infiltration of dust or other through the pipe ends - Oxidation film during brazing without blowing nitrogen - Insufficient flushing by nitrogen after brazing	Clogging of expansion valve, capillary tube and filter ☛ Oxidation of oil ☛ Compressor failure ↓ Insufficient cooling or heating compressor failure	Pipe Protection 1 Mounting Caps 2 Taping 3 Pinching ↓ Flushing
3. No leakage No leakage shall exist	- Brazing failure - Failed flaring work and insufficient torque of squeezing flare - Insufficient torque of squeezing flanges	Refrigerant shortage ☛ Performance decrease ☛ Oxidation of oil ☛ Overheating of compressor ↓ Insufficient cooling or heating compressor failure	Careful Basic Brazing Work ↓ Basic Flaring Work ↓ Basic Flange Connecting Work ↓ Air Tight Test ↓ Holding of Vacuum

2.1.3 Suspension of refrigerant piping

Suspend the refrigerant piping at certain points and prevent the refrigerant piping from touching weak parts of the building such as walls, ceiling, etc. (If touched, abnormal noises may occur due to the vibration of the piping. Pay special attention in case of short piping length).

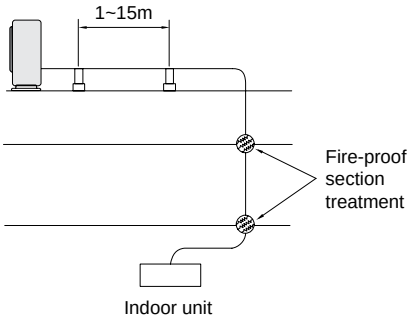

In order to fix the piping to wall or ceilings use suspension and clamping systems as shown in the following figure.

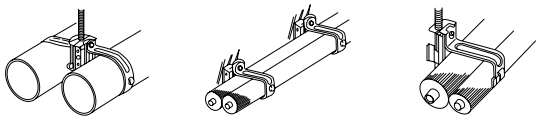

Все каталоги и инструкции здесь: https://splitsystema48.ru/instrukcii-po-ekspluatacii-kondicionerov.html

2.1.4. Tightening torque

1. Flaring connections (smaller than a diameter of Ø19.05) are generally used. However, if incorrect flaring is performed, it will cause serious refrigerant leakage.
2. Shape after Flaring, it should be rectangular and flat, and no uneven thickness, cracks and scratches should exist.

Nominal diameter Ød		Dimension
(inches)	(mm)	A+0.0/-0.4 (mm)
1/4	6.35	9.1
3/8	9.53	13.2
1/2	12.70	16.6
5/8	15.88	19.7
3/4	19.05	(*)

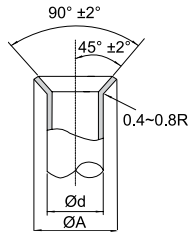

(*) It is impossible to perform the flaring work. In this case, use a joint selected from the table in point 3.

When tightening the flare nuts, use two spanners, as shown in the figure.

Pipe diameter (mm)	Size B (R410A)	Tightening torque (Nm)
Ø6.35	17	20
Ø9.53	22	40
Ø12.70	26	60
Ø15.88	29	80
Ø19.05	36	100

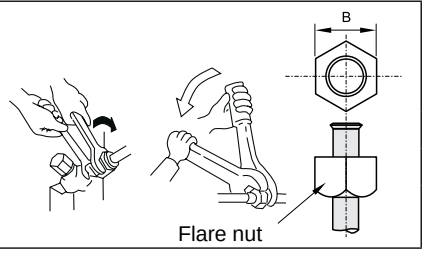

Stop valve

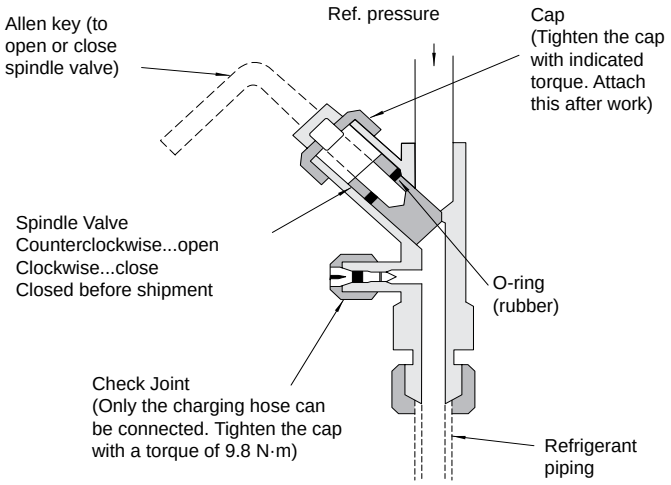

Tightening torque

HP	Liquid valve (N.m)	Gas valve (N.m)
8	38.0	44.1
10~16	38.0	49.0
18~32	38.0	58.8
34~48	44.1	70.0

Allen key size (mm)

HP	Liquid valve	Gas valve
8~14	4	10
16~22	5	10
24~48	10	10

As for Allen keys of 5 and 10 mm, use field-supplied keys.

caution

Do not apply force to the spindle valve at the end of opening (5 Nm or smaller). The back seat construction is not provided.
During the test run, fully open the spindle. If it is not fully opened, the devices will be damaged.

Все каталоги и инструкции здесь: https://splitsystema48.ru/instrukcii-po-ekspluatacii-kondicionerov.html

2.1.5. Brazing work

The most important work in the refrigerant piping installation work is the brazing of the pipes. If it accidentally occurs a leakage due to a careless brazing process, it will cause clogged capillary pipes or serious compressor failure.
In order to guarantee a proper brazing neck between different pipes surfaces, accurate pipe dimensions after the expansion process (see the table below):
It is important to control the clearance of the pipe fitting portion as shown below. In the case that a cooper tube expansion jig is used, following dimensions should be secured.

Copper pipe size	Ød1	Gap	a	Copper pipe size	Ød1	Gap	a
+0.08 Ø6.35 -0.08	+0.1 Ø6.5 0	0.33 0.07	6	+0.09 Ø22.22 -0.09	+0.1 Ø22.42 0	0.39 0.11	10
+0.08 Ø9.53 -0.08	+0.1 Ø9.7 0	0.35 0.09	8	+0.12 Ø25.4 -0.12	+0.1 Ø25.6 0	0.42 0.08	12
+0.08 Ø12.7 -0.08	+0.1 Ø12.9 0	0.38 0.19	8	+0.12 Ø28.58 -0.12	+0.1 Ø28.78 0	0.42 0.08	12
+0.09 Ø15.88 -0.09	+0.1 Ø16.1 0	0.41 0.13	8	+0.12 Ø31.75 -0.12	+0.1 Ø32.0 0	0.47 0.13	12
+0.09 Ø19.05 -0.09	+0.1 Ø19.3 0	0.44 0.16	10	+0.12 Ø38.1 -0.12	+0.1 Ø38.3 0	0.52 0.18	14

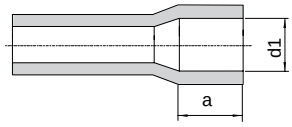

A basic brazing method is shown below.

1. Pre-heat the outer tube for better flowing of the filler metal
2. Heat inner side tube evenly
3. Rubber plug
4. Packless valve
5. High pressure hose
6. 0.03 to 0.05 MPa (0.3 to 0.5 Kg/cm^2 G)
7. Reducer valve: open this valve only when the gas is needed
8. Nitrogen gas flow 0.05m^3/h or smaller

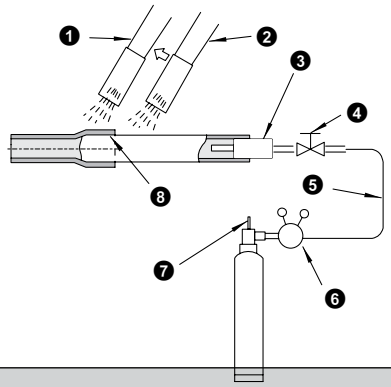

caution

- *Use nitrogen gas for blowing during pipe brazing. If oxygen, acetylene or fluorocarbon gas is used, it will cause an explosion or poisonous gas.*
- *During the brazing work, a lot of oxidation film will be generated inside of the pipes if no oxygen-free nitrogen gas is blown through the pipes. This film will be flecked off after operation and will circulate in the refrigeration cycle, resulting in clogged expansion valves, etc. This coud origin problems in the compressor.*
- *Use a reducer valve when nitrogen gas blowing is performed during brazing. The gas pressure should be maintained within 0.03 to 0.05 MPa. If an excessively high pressure is applied to a pipe, it could origin an explosion.*

Все каталоги и инструкции здесь: https://splitsystema48.ru/instrukcii-po-ekspluatacii-kondicionerov.html

2.2. Outdoor units piping installation

2.2.1. Factory supplied accessories

Accessory		Q'ty	Purpose
Flange gasket	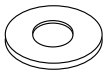	1	Connection for refrigerant gas piping with RAS-10FSN2 to 48FSN2
Pipe flange of refrigerant gas piping	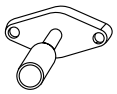	1	
Pipe with flare nut of refrigerant gas piping (Ø19.05)	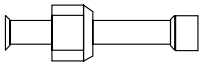	1	Connection for refrigerant gas piping with RAS-8FSN2
Pipe with flare nut of refrigerant liquid piping (Ø19.05)		1	Connection for refrigerant liquid piping with RAS-26FSN2 to 48FSN2
Rubber bush	–	2	For connection hole of operation wiring
	–	1	For connection hole of power source wiring
Screw	–	3	Spare

Все каталоги и инструкции здесь: https://splitsystema48.ru/instrukcii-po-ekspluatacii-kondicionerov.html

2.2.2. Position of piping connections

– Remove the service cover as shown in fig. below before piping connection.

– Remove fixing screws on the lower position (6 pieces) and the upper position (8 pieces).

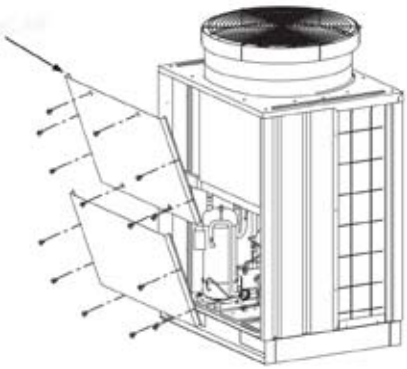

– Connect the pipes with the liquid line stop valve and the gas line stop valve of the outdoor units as shown:

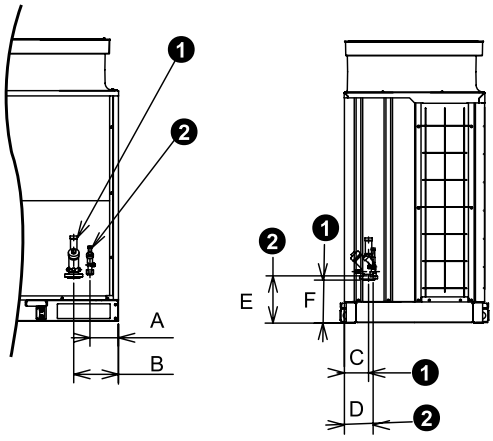

Model	❶ Refrigerant Gas piping connection Ø	❷ Refrigerant Liquid piping connection Ø	A	B	C	D	E	F
RAS-8FSN2	19.05 ~ 22.2 flare nut	9.53 ~ 12.7 flare nut	167	271	175	175	310	244
RAS-10FSN2	22.2 ~ 25.4 flange	9.53 ~ 12.7 flange		257	170			258
RAS-12FSN2	25.4 ~ 28.6 flange	12.7 ~ 15.88 flange				174	291	
RAS-14FSN2				263	163		288	248
RAS-16FSN2	28.6 ~ 31.75 flange	12.7 ~ 15.88 flange						
RAS-18FSN2	28.6 ~ 31.75 flange	15.88 ~ 19.05 flange				170	282	
RAS-20FSN2								
RAS-22FSN2								
RAS-24FSN2								
RAS-26FSN2	31.75 ~ 34.92 flange	19.05 ~ 22.2 flange			143		279	254
RAS-28FSN2								
RAS-30FSN2								
RAS-32FSN2								
RAS-34FSN2								
RAS-36FSN2	38.1 ~ 41.3 flange	19.05 ~ 22.2 flange						
RAS-38FSN2								
RAS-40FSN2								
RAS-42FSN2								
RAS-44FSN2								
RAS-46FSN2								
RAS-48FSN2								

Все каталоги и инструкции здесь: https://splitsystema48.ru/instrukcii-po-ekspluatacii-kondicionerov.html

2.2.3. Flange piping connection

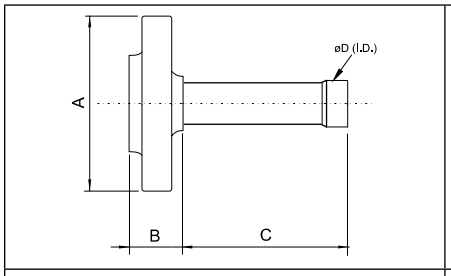

Figure 1

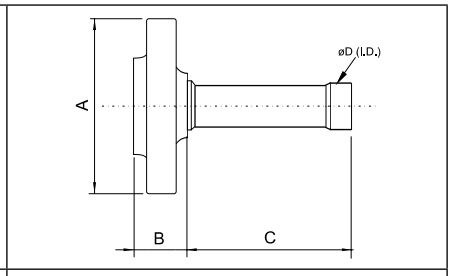

Figure 2

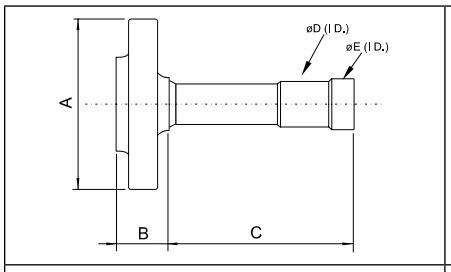

Figure 3

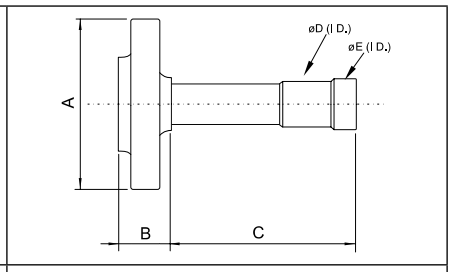

Figure 4

		Dimensions (mm)				
Model	Figure	A	B	C	ØD (ID)	ØE (ID)
RAS-10FSN2 Gas	1	95	27	97	22.2	–
RAS-12FSN2 Gas	1	95	27	85	25.4	–
RAS-14FSN2 Gas	2	100	29	87	25.4	–
RAS-16~24FSN2 Gas	1	100	29	87	28.6	–
RAS-26~34FSN2 Gas	2	135	34	116	31.75	34.92
RAS-36~48FSN2 Gas	4	135	34	116	38.10	41.30

NOTE

– For connecting the lower piping diameter for the Outdoor Units having two piping dimensions, cut off the end part of pipe flange (factory supplied), which is for connecting the higher piping diameter.

– If it is necessary, use the reducer.

Все каталоги и инструкции здесь: https://splitsystema48.ru/instrukcii-po-ekspluatacii-kondicionerov.html

2.2.4. Piping connection

– Confirm that the valve is closed.
– Prepare a field-supplied bend pipe for liquid line. Connect it to the liquid valve by flare nut through the square hole of bottom base.
– For gas piping connection::

RAS-10~48HP

– Prepare a field-supplied bend pipe for gas line. Solder it and the factory-supplied pipe flange at the outside of the unit.

1. Factory supplied pipe flange
2. Solder by bottom side up
3. Field-supplied bend pipe

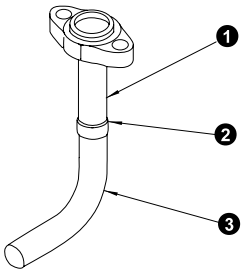

– Remove the flange and the gasket attached to the unit before shipping and attach the new gasket (factory supplied) before connecting the pipe flange to the gas valve.

RAS-8~48HP

1. Gas valve
2. Nuts (only for 8/12HP)
3. Gasket
4. Pipe flange (4 holes for 26~48HP)
5. Bolts (4 bolts for 26~48HP)
6. Remove

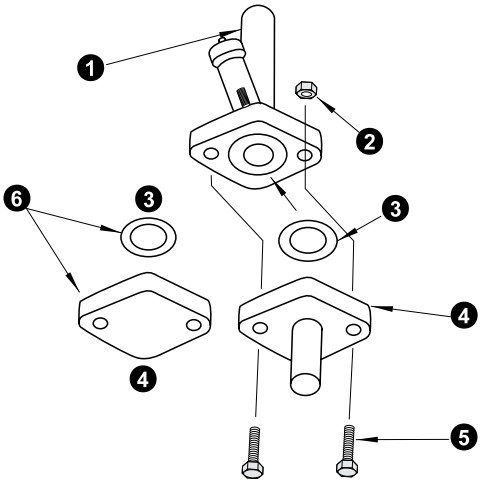

– Solder the bend pipes and field piping.

Все каталоги и инструкции здесь: https://splitsystema48.ru/instrukcii-po-ekspluatacii-kondicionerov.html

2.2.5 Vacuum and refrigerant charge

1. The stop valve has been closed before shipment, however, make sure that the stop valves are closed completely.
2. Connect the indoor unit and the outdoor unit with field-supplied refrigerant piping.

   Suspend the refrigerant piping at specified points and prevent the refrigerant piping from touching weak parts of the building such as wall, ceiling, etc. (Abnormal sound may occur due to the vibration of the piping. Pay special attention in case of short piping length.)
3. Connect the gauge manifold using charging hoses with a vacuum pump or a nitrogen cylinder to the check joints of the liquid line and the gas line stop valves.

   Perform the air-tight test.

   Connect a manifold gauge to the check joints of the liquid and gas stop valves in the outdoor unit. Do not open the stop valves.

   Apply nitrogen gas pressure of 4.15MPa for FSN2 series.
4. Check for any gas leakage at the flare nut connections, or brazed parts by gas leakage tester or by use of a foaming agent.
5. Connect a manifold gauge to the check joints at the both sides.

   Continue vacuum pumping work until the pressure reaches -756mmHg or lower for one to two hours.

   After vacuum pumping work, stop the manifold valve's valve, stop the vacuum pump and leave it for one hour. Check to ensure that the pressure in the manifold gauge does not increase.

1. Outdoor unit
2. Stop valve (gas line)
3. Stop valve (liquid line)
4. Manifold gauge
5. Nitrogen tank (for air tight test & nitrogen blow during brazing)
6. Refrigerant tank (R410A)
7. Vacuum pump
8. Indoor unit
9. Insulation
10. Multi-kit
11. Liquid line
12. Gas line
13. Oil trap is recomended at every 10 meters lift

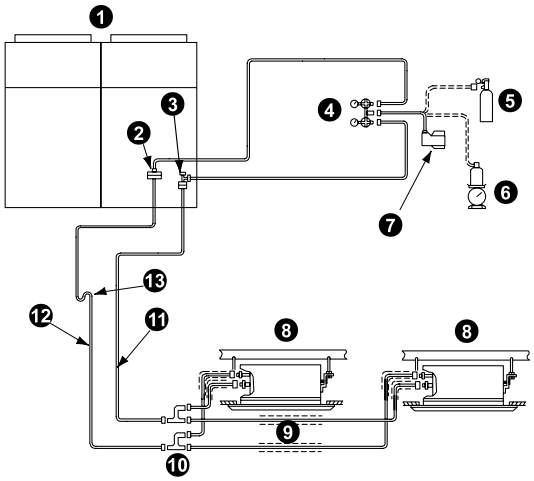

NOTE

1. If tools or measuring instruments come into contact with the refrigerant, use the tools or the measuring instruments exclusive for R410A.

2. If vacuum degree of -756mmHg is not available, it is considered that there is a gas leakage. Check for any gas leakage once again. If no leakage exists, operate the vacuum pump for one to two hours.

Все каталоги и инструкции здесь: https://splitsystema48.ru/instrukcii-po-ekspluatacii-kondicionerov.html

6. To charge refrigerant, connect the gauge manifold using charging hoses with a refrigerant charging cylinder to the check joint of the liquid line stop valve.
7 Fully open the gas line stop valve and slightly open the liquid line stop valve.
8 Charge refrigerant by opening the gauge manifold valve.
9 Charge the required refrigerant within the difference range of ±0.5kg by operating the system in cooling.
10. Fully open the liquid line stop valve after completing refrigerant charge.
11. Continue cooling operation for more than 10 minutes to circulate the refrigerant.

	CAUTION
	Check for refrigerant leakage in detail. If a large refrigerant leakage occurs, it will cause difficulty with breathing or harmful gases would occur if a fire was being used in the room. *An excess or a shortage of refrigerant is the main cause of trouble to the units. Charge the correct refrigerant quantity.*

Все каталоги и инструкции здесь: https://splitsystema48.ru/instrukcii-po-ekspluatacii-kondicionerov.html

2.2.6. Drain discharging boss

When the base of the outdoor unit is temporarily utilized as a drain receiver and the drain water in it is discharged, this drain boss is utilized to connect the drain piping.

Model	Applicable model
DBS-26	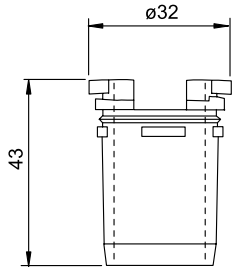

Outdoor unit HP	Drain kit quantity (units)
8~12	4
14~24	8
26~42	12
44~48	16

■ **Connecting the drain discharging boss**

- Insert the rubber cap into the drain boss up to the extruded portions
- Insert the boss into the unit base and turn approximately 40 degree counterclockwise.
- Size of the drain boss is 32 mm (O.D.)
- A drain pipe should be field-supplied

	NOTE
	– Do not use this drain boss set in a cold area, because the drain water may freeze. *– This drain boss is not sufficient to collect all the drain water. If collecting drain water is completely required, provide a drain-pan that is bigger than the unit base and install it under the unit with drainage.* *– In order to guarantee the proper condensate draining, the siphon installation is very important.*

Все каталоги и инструкции здесь: https://splitsystema48.ru/instrukcii-po-ekspluatacii-kondicionerov.html

3. Electrical wiring

Contents

3. Electrical wiring ____ 31
3.1. General check ____ 32
3.2. Electrical wiring for the outdoor unit ____ 33
3.2.1. Electrical wiring connection for outdoor unit ____ 33
3.2.2 Setting the DIP switches for the outdoor unit ____ 34
3.3. Common wiring ____ 38
3.3.1. Electrical wiring between the indoor unit and the outdoor unit ____ 38
3.4. Wire size ____ 40
3.5. Electrical wiring diagrams ____ 42

Все каталоги и инструкции здесь: https://splitsystema48.ru/instrukcii-po-ekspluatacii-kondicionerov.html

3.1. General check

danger

- *Before installing the electrical wiring or before performing a periodical check, turn OFF the main switch to the indoor unit and the outdoor unit. For safety reasons, be sure that the indoor fan and the outdoor fan have stopped.*
- *Prevent the wires from touching the refrigerant pipes, the plate or cutting edges and the electrical components inside the unit, to prevent them getting damaged. In worst cases, a fire may occur.*
- *Tightly secure the wires with the cord clamp inside the indoor unit.*

Note

- *In case of performing a test run operation take especially care because some security features are disabled: the units will operate during 2 hours without Thermo-OFF, and the 3-minute guard for compressor protection will not be effective during the test.*
- *Fix rubber bushes with an adhesive on the panel when the conduit pipes to the outdoor unit are not used.*
- *In forced stopped compressor mode, the compressor operation is OFF.*

1. Make sure that the field-selected electrical components (main switches, circuit breakers, wires, conduit connectors and wire terminals) have been properly selected according to the electrical specifications in this service manual. Make sure that the electrical components comply with the National Electrical Code (NEC).
2. Following the Council Directive 89/336/EEC and its amendments 92/31/EEC and 93/68/EEC, relating to electromagnetic compatibility, next table indicates maximum permissible system impedance Zmax at the interface point of the user's supply, in accordance with EN61000-3-11

MODEL	Zmax (Ω)
RAS-8FSN2	
RAS-10FSN2	
RAS-12FSN2	
RAS-14FSN2	0.283
RAS-16FSN2	0.266
RAS-18FSN2	0.221
RAS-20FSN2	0.191
RAS-22FSN2	0.166
RAS-24FSN2	0.152
RAS-26FSN2	0.149
RAS-28FSN2	0.137

MODEL	Zmax (Ω)
RAS-30FSN2	0.126
RAS-32FSN2	0.120
RAS-34FSN2	0.112
RAS-36FSN2	0.106
RAS-38FSN2	0.096
RAS-40FSN2	0.087
RAS-42FSN2	0.084
RAS-44FSN2	0.082
RAS-46FSN2	0.077
RAS-48FSN2	0.073

3. Make sure that the power supply voltage is within ±10% of the rated voltage.
4. Check the capacity of the electrical wires. If the power source capacity is too low, you cannot start the system due to the voltage drop.
5. Make sure that the ground wire is connected.
6. Main Switch

Install a multi-pole main switch with a distance of 3.5 mm or more between each phase.

Все каталоги и инструкции здесь: https://splitsystema48.ru/instrukcii-po-ekspluatacii-kondicionerov.html

3.2. Electrical wiring for the outdoor unit

3.2.1. Electrical wiring connection for outdoor unit

■ **FSN2**

The electrical wiring connection for the outdoor unit is shown beside.

1. Connect the power supply wires to L1, L2, L3 and N (for 400V\50Hz) for the three-phase power source on the terminal board. Connect the ground wires to the terminals in the electrical box.
2. Connect the control cables between the outdoor unit and the indoor unit to the terminals 1 and 2 on the terminal board.
3. Do not run the wires in front of the fixing screw of the service access panel. If you do so, you cannot remove the fixing screw.

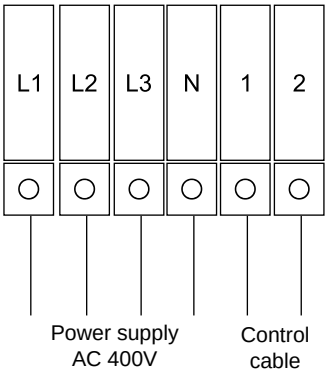

❶ Earth

❷ Cord clamp (2 pcs)

❸ Connection hole of power supply wiring *1):
Ø52 knock out hole (8~24HP)
Ø70 knock out hole (26~48HP

❹ Connection hole of operation wiring between outdoor unit and indoor units Ø26 knock out hole x 2. *1)

❺ U-notch shape

❻ Power source wiring

❼ Operation wiring between outdoor units (DC5V (non pole)

❽ Operation wiring between indoor units and outdoor unit DC5V (non pole)

❾ Electrical box

*1) Seal hermetically the entry of conduit pipe by using putty, etc. (for water protection)

RAS-8~12HP

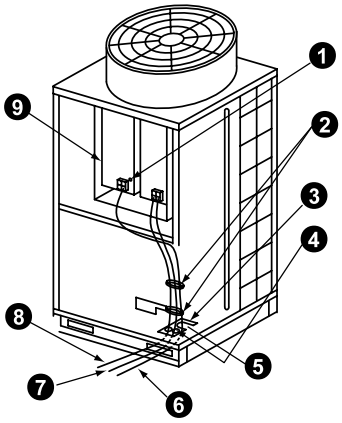

RAS-14-48HP

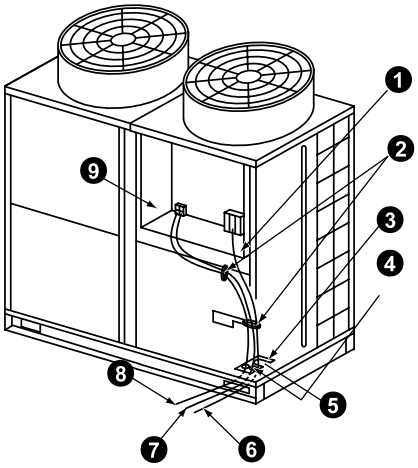

	CAUTION
	Fix the shielded operation wires between the indoor unit and outdoor unit with a cord band at only one point. You must connect the shielded operation wires to the earth of the indoor unit only.

4. Before turning ON the main switch, check the item below. If the nominal voltage for the outdoor unit is 415V, change the connector CN4 to CN5 of the transformer TF in the electrical box as shown in the figure below.

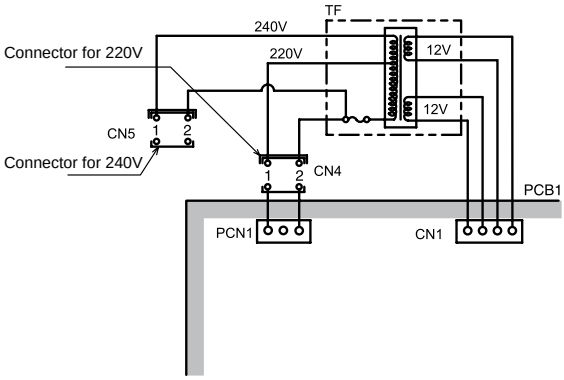

Все каталоги и инструкции здесь: https://splitsystema48.ru/instrukcii-po-ekspluatacii-kondicionerov.html

3.2.2. Setting the DIP switches for the outdoor unit

Quantity and location of DIP switches

Push switch PSW1: manual defrost

Push switches PSW2, PSW3: Ckecking by 7-segment

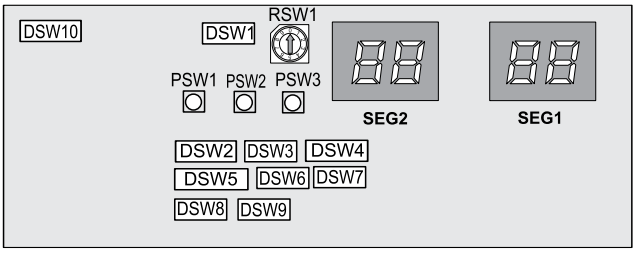

	NOTE
	The mark "■" indicates position of dips switches. Figures show setting before shipment or after selection. *Not mark "■" indicates pin position is not affecting*

	CAUTION
	Before setting dips switches, firstly turn off power source and set the position of the dips switches. If the switches are set without turning off the power source, the contents of the setting are invalid.

Dip switches setting

■ **DSW1: Setting the refrigerant cycle number**

Setting is required. Set the unit number of outdoor unit at each refrigerant cycle. (Setting before shipment is unit 0)

	DSW1	RSW1
Setting before shipment (unit number 0)	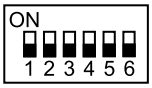	
	Tens digit	Last digit
Example: in case of setting refrigerant cycle number 25 Maximum cycle number is 63.	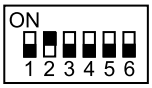	

Все каталоги и инструкции здесь: https://splitsystema48.ru/instrukcii-po-ekspluatacii-kondicionerov.html

DSW2: Capacity setting

No setting is required. Before shipment, each outdoor unit is se as shown below.

Model RAS-	8FSN2	10FSN2	12FSN2	14FSN2	16FSN2	18FSN2	20FSN2
Setting position	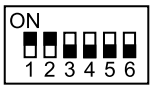	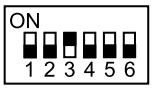	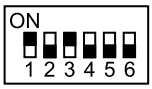	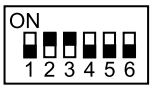	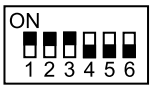	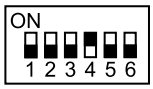	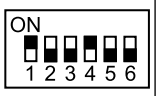
Model RAS-	**22FSN2**	**24FSN2**	**26FSN2**	**28FSN2**	**30FSN2**	**32FSN2**	**34FSN2**
Setting position	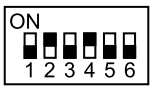	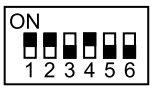	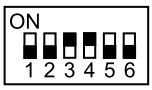	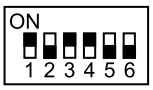	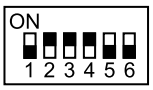	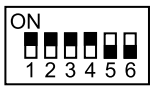	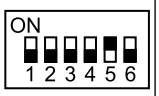
Model RAS-	**36FSN2**	**38FSN2**	**40FSN2**	**42FSN2**	**44FSN2**	**46FSN2**	**48FSN2**
Setting position	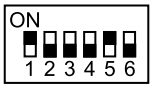	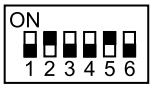	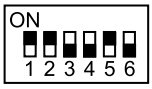	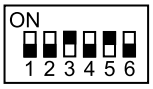	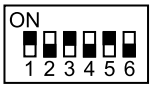	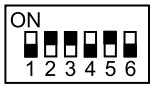	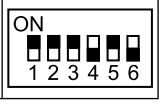

3

DSW3: Height difference

Setting is required

The Outdoor Unit is located higher than Indoor Unit (0~50m) The Outdoor Unit is located lower than Indoor Unit (0~20m)	
The Outdoor Unit is located lower than Indoor Unit (20~40m)	
Heating capacity regulation for heigh difference	

DSW4: Test operation and service setting

Setting is required

This DIP switch is used for test operation and operating compressor.

Setting before the shipment	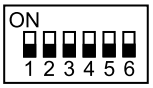
Test cooling operation	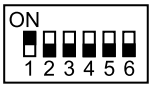
Test heating operation	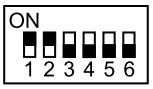
Compressor forced stop	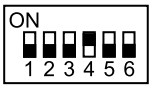
Operation for exchange compressor	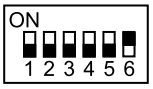

Все каталоги и инструкции здесь: https://splitsystema48.ru/instrukcii-po-ekspluatacii-kondicionerov.html

■ DSW5: Optional function setting

Setting is required for the following optional functions.

Setting before the shipment	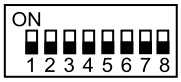
Except compressor Nº1	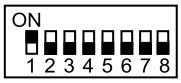
Except compressor Nº2	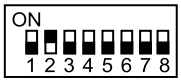
Except compressor Nº3	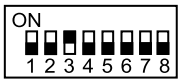
Except compressor Nº4	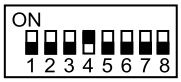
Except compressor Nº5	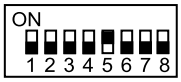
Judgement for refrigerant charge measurement	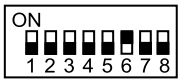
Selection of the input signal	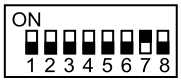
Function setting	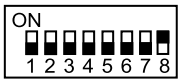

■ DSW6: Piping lenght setting

Setting is required

Setting before the shipment and total length < 25m	
25m ≤ Total length < 50m	
50m ≤Total length < 75m	
75m ≥ Total length	

■ DSW7: Power supply setting

Setting is required

Setting before the shipment: 380V	
415V	

Все каталоги и инструкции здесь: https://splitsystema48.ru/instrukcii-po-ekspluatacii-kondicionerov.html

■ DSW8: Unit model code setting

No setting is required.

All areas	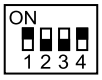

■ DSW9: Not prepared

No setting is required.

Setting before shipment	

■ DSW10: Setting for transmitting

The setting for transmitting is required for the cancellation of end terminal resistance.

Before the shipment, the No.1 pin of DSW10 is set at the ON side.	
If the quantity of outdoor units in the same H-LINK or H-LINK II, is two or more, set the No.1 pin of DSW10 in the 2nd unit to OFF. If only one outdoor unit is used, no setting is required.	
If you apply high voltage to the terminals 1 and 2 of the TB1, the fuse on the PCB is blown out. If that is the case, first connect the wiring to the TB1. Then, turn on #2.	
End resistance cancelation	

Все каталоги и инструкции здесь: https://splitsystema48.ru/instrukcii-po-ekspluatacii-kondicionerov.html

3.3. Common wiring

3.3.1. Electrical wiring between the indoor unit and the outdoor unit

	CAUTION
	Use the shielded twisted pair cable or the shielded pair cable for the transmission cables between the indoor unit and the outdoor unit. Connect the shielded part to the earth screw in the electrical box of the indoor unit as shown below. Also use these cables for the operation wiring between one indoor unit and another indoor unit (H-LINK connection).

1. Shielded part
2. Transmission cables
3. Power supply cables
4. Earth screw

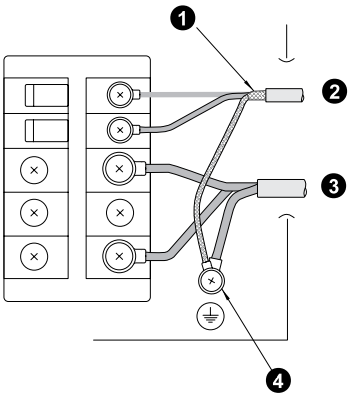

- *Connect the electrical cables between the indoor unit and the outdoor unit as shown in the wiring diagram.*
- *Make sure that the terminals for the power supply wiring and the terminals for the intermediate wires between the indoor unit and the outdoor unit coincide correctly. The terminals for the power supply wiring are "L1" to "L1", "L2" to "L2", "L3" to "L3" and "N" to "N" of each terminal board. For the operating line, the terminals for the intermediate wires are "1 and 2" to "1 and 2" of each terminal board for DC 5V. Otherwise, you may damage some components.*
- *When you are installing the electrical wiring, follow the local codes and the local regulations.*
- *Connect the operation wiring to the units in the same refrigerant cycle. (You should connect the refrigerant piping and the control wiring to the same indoor units). If you connect the refrigerant piping and the control wiring to the units in the different refrigerant cycle, an abnormal operation may occur.*
- *You must connect the shielded part to earth only in one cable side.*
- *Do not use more than three cores for the operation wiring (H-LINK II). Select the core sizes according to the national regulations.*
- *If there are multiple outdoor units that are connected to one power supply wire, open a hole near the connection hole for the power supply wiring.*

The recommended breaker sizes are shown in the table of electrical data and recommended wiring.

- *If a conduit tube for the field wiring is not used, fix the rubber bushes on the panel with adhesive.*
- *All the field wiring and the equipment must comply with the local codes and the international codes.*
- *Make sure that the power source voltage is correct.*
- *An incorrect wiring may cause a breakdown of the transformer PSC-5HR or the units*
- *Especially, DO NOT connect the power source to the terminal board for transmission.*
- *DO NOT install the H-LINK II wires along the power supply wire, other signal wires, and others. If you install the H-LINK II wires along those wires, there may be a malfunction due to the electrical noise. If you need to install the H-LINK II wires near those wires, provide a distance of 15cm or more. Or alternatively, insert the wires into the steel pipe and ground one end of the pipe.*

Все каталоги и инструкции здесь: https://splitsystema48.ru/instrukcii-po-ekspluatacii-kondicionerov.html

Electrical wiring connection

Models: RAS-8~-48FSN2

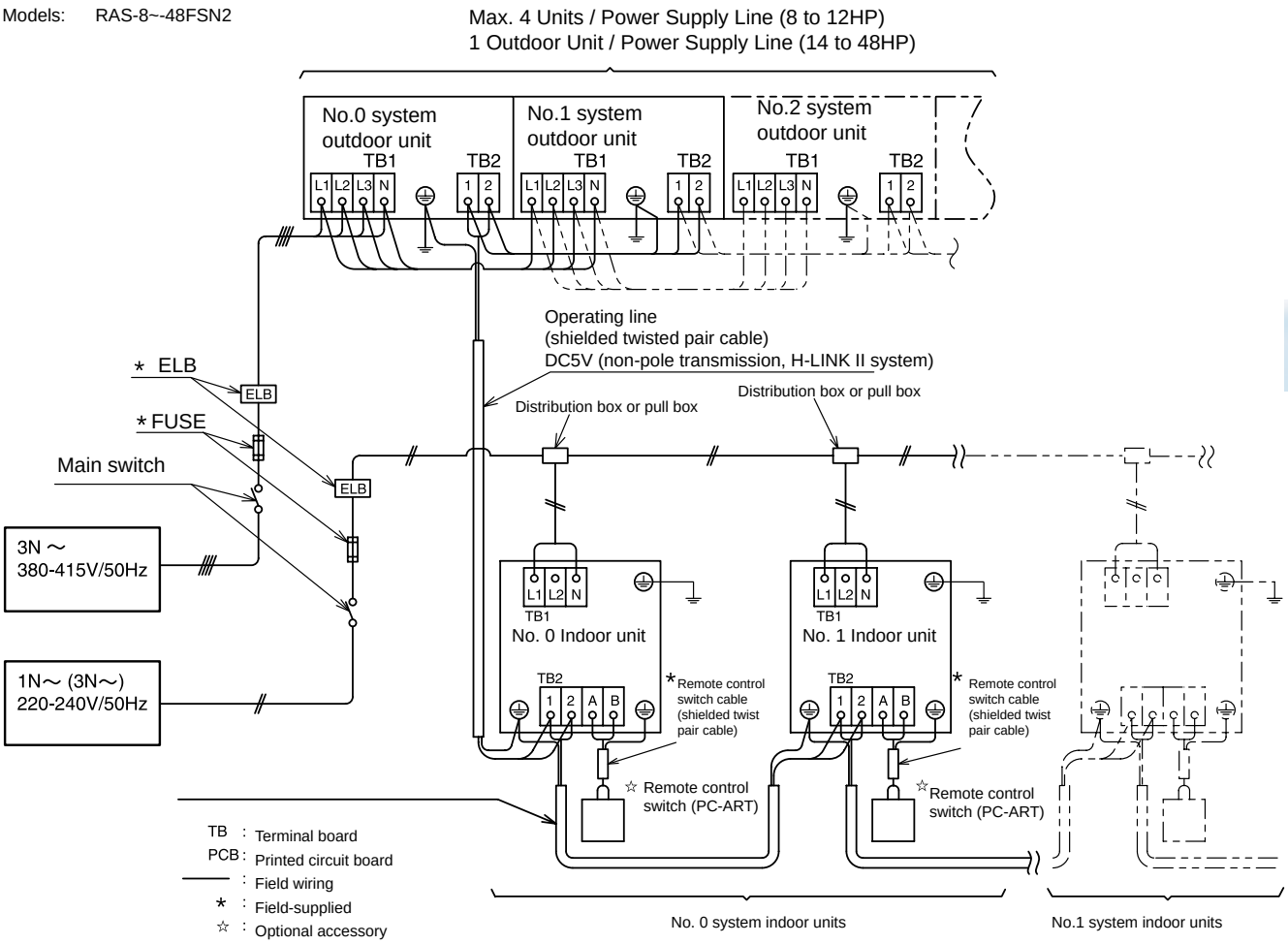

Все каталоги и инструкции здесь: https://splitsystema48.ru/instrukcii-po-ekspluatacii-kondicionerov.html

3.4. Wire size

Model	Power Source	Maximum Current (A)	Power Source Cable Size		Transmitting Cable Size	
			EN60 335-1 ❶	MLFC ❷	EN60 335-1 ❶	Shielded Twist Pair Cable
RAS-8FSN2	3~380-415V/50Hz	12	2.5 mm²	2.0 mm²	0.75mm²	0.75mm²
RAS-10FSN2		15	2.5 mm²	2.0 mm²		
RAS-12FSN2		20	4 mm²	3.5 mm²		
RAS-14FSN2		22	4 mm²	3.5 mm²		
RAS-16FSN2		25	4 mm²	3.5 mm²		
RAS-18FSN2		29	6 mm²	5.5 mm²		
RAS-20FSN2		34	10 mm²	5.5 mm²		
RAS-22FSN2		39	10 mm²	8 mm²		
RAS-24FSN2		43	-	8 mm²		
RAS-26FSN2		44	-	14 mm²		
RAS-28FSN2		48	-	14 mm²		
RAS-30FSN2		51	-	14 mm²		
RAS-32FSN2		54	-	14 mm²		
RAS-34FSN2		58	-	14 mm²		
RAS-36FSN2		62	-	14 mm²		
RAS-38FSN2		67	-	14 mm²		
RAS-40FSN2		74	-	22 mm²		
RAS-42FSN2		77	-	22 mm²		
RAS-44FSN2		79	-	22 mm²		
RAS-46FSN2		84	-	22 mm²		
RAS-48FSN2		89	-	22 mm²		

NOTES:

1. *Follow local codes and regulations when selecting field wires.*
2. *The wire sizes marked with ❶ in the table of this page are selected at the maximum current of the unit according to the European Standard, EN60 335-1. Use the wires which are not lighter than the ordinary tough rubber sheathed flexible cord (code designation H05RN-F) or ordinary polychloroprene sheathed flexible cord (code designation H05RN-F).*
3. *The wire sizes marked with ❷ in the table of this page are selected at the maximum current of the unit according to the wire, MLFC (Flame Retardant Polyflex Wire) manufactured by Hitachi Cable Ltd., Japan.*
4. *Use a shielded cable for the transmitting circuit and connect it to ground.*
5. *In the case that power cables are connected in series, add each unit maximum current and select wires below.*
6. *The earth cable size complied with local code: IEC 245, Nº 571.*

Selection according to EN60 335-1		Selection according to MLFC (at cable temp. of 60 ºC)	
Current i (A)	Wire Size (mm²)	Current i (A)	Wire Size (mm²)
I ≤ 6	0.75	I ≤ 15	0.5
6 < i ≤ 10	1	15 < i ≤ 18	0.75
10 < i ≤ 16	1.5	18 < i ≤ 24	1.25
16 < i ≤ 25	2.5	24 < i ≤ 34	2
25 < i ≤ 32	4	34 < i ≤ 47	3.5
32 < i ≤ 40	6	47 < i ≤ 62	5.5
40 < i ≤ 63	10	62 < i ≤ 78	8
63 < i	❸	78 < i ≤ 112	14
		112 < i ≤ 147	22

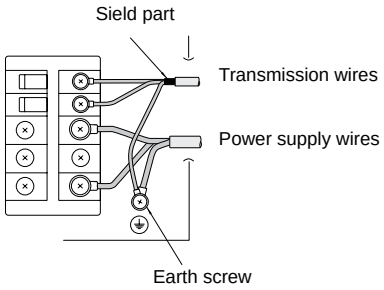

❸ In the case that current exceeds 63A, use MLFC cables, and do not connect cables in series.

CAUTION:

-- *Install a multi-pole main switch with a space of 3.5 mm or more between each phase.*

-- *Use shielded wires for transmission wires between the indoor and the outdoor units, and connect the shielded part to the earth screw in the electrical box of the indoor unit as shown in the figure.*

Все каталоги и инструкции здесь: https://splitsystema48.ru/instrukcii-po-ekspluatacii-kondicionerov.html

■ **Select the Main Switches in accordance with the following table:**

– Indoor units

Model	Power Source	Maximum Running Current (A)	CB(A)	ELB no. poles/A/mA
All indoor units		5.0 A	6	
	1~230V/50Hz			2/40/30
RPI-(8.0/10.0)FSN2E	10.0 A	16		

– Outdoor units

Model	Power Source	Maximum Running Current (A)	CB(A)	ELB no. poles/A/mA
RAS-8FSN2	3~380-415V/50Hz	12	15	4/20/30
RAS-10FSN2		15	20	4/20/30
RAS-12FSN2		20	30	4/30/30
RAS-14FSN2		22	30	4/30/30
RAS-16FSN2		25	30	4/40/30
RAS-18FSN2		29	40	4/40/30
RAS-20FSN2		34	40	4/50/100
RAS-22FSN2		39	50	4/50/100
RAS-24FSN2		43	50	4/60/100
RAS-26FSN2		44	60	4/60/100
RAS-28FSN2		48	75	4/75/100
RAS-30FSN2		51	75	4/75/100
RAS-32FSN2		54	75	4/75/100
RAS-34FSN2		58	75	4/75/100
RAS-36FSN2		62	75	4/100/100
RAS-38FSN2		67	75	4/100/100
RAS-40FSN2		74	100	4/100/100
RAS-42FSN2		77	100	4/100/100
RAS-44FSN2		79	100	4/100/100
RAS-46FSN2		84	100	4/125/100
RAS-48FSN2		89	100	4/125/100

ELB: Earthleakage Breaker; CB: Circuit Breaker

Все каталоги и инструкции здесь: https://splitsystema48.ru/instrukcii-po-ekspluatacii-kondicionerov.html

3.5. Electrical wiring diagrams

This sub-chapter shows the Electrical Wiring Diagram for each unit of the new Hitachi Set Free FSN2.

Unit model _____ Page

Electrical wiring diagram for models: RAS-8~12FSN2 _____ 43
Electrical wiring diagram for models: RAS-14~24FSN2 _____ 44
Electrical wiring diagram for models: RAS-26~42FSN2 _____ 45
Electrical wiring diagram for models: RAS-44~48FSN2 _____ 46

Все каталоги и инструкции здесь: https://splitsystema48.ru/instrukcii-po-ekspluatacii-kondicionerov.html

3

Electrical wiring diagram for models: RAS-8~12FSN2

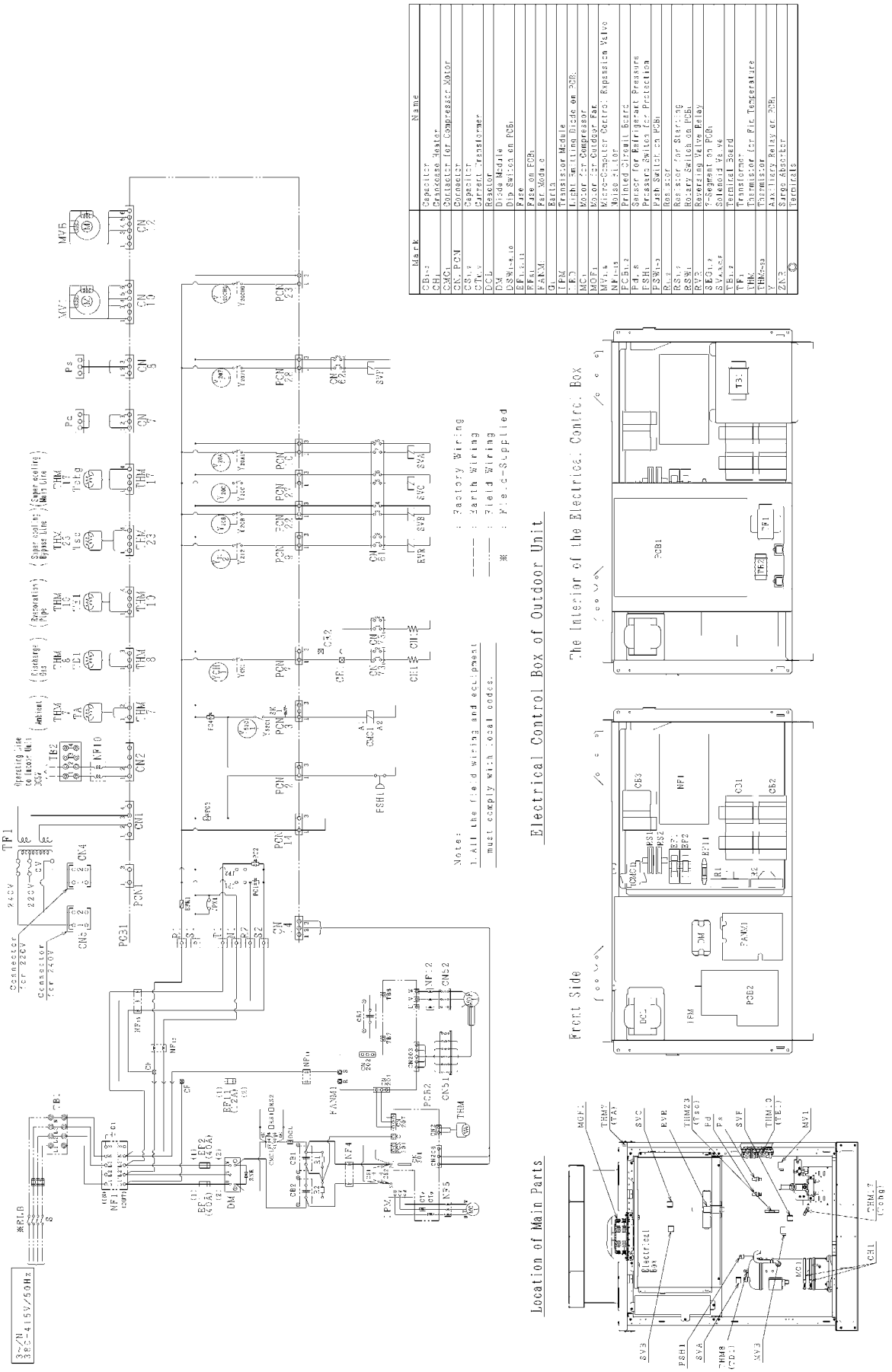

Все каталоги и инструкции здесь: https://splitsystema48.ru/instrukcii-po-ekspluatacii-kondicionerov.html

Electrical wiring diagram for models: RAS-14~24FSN2

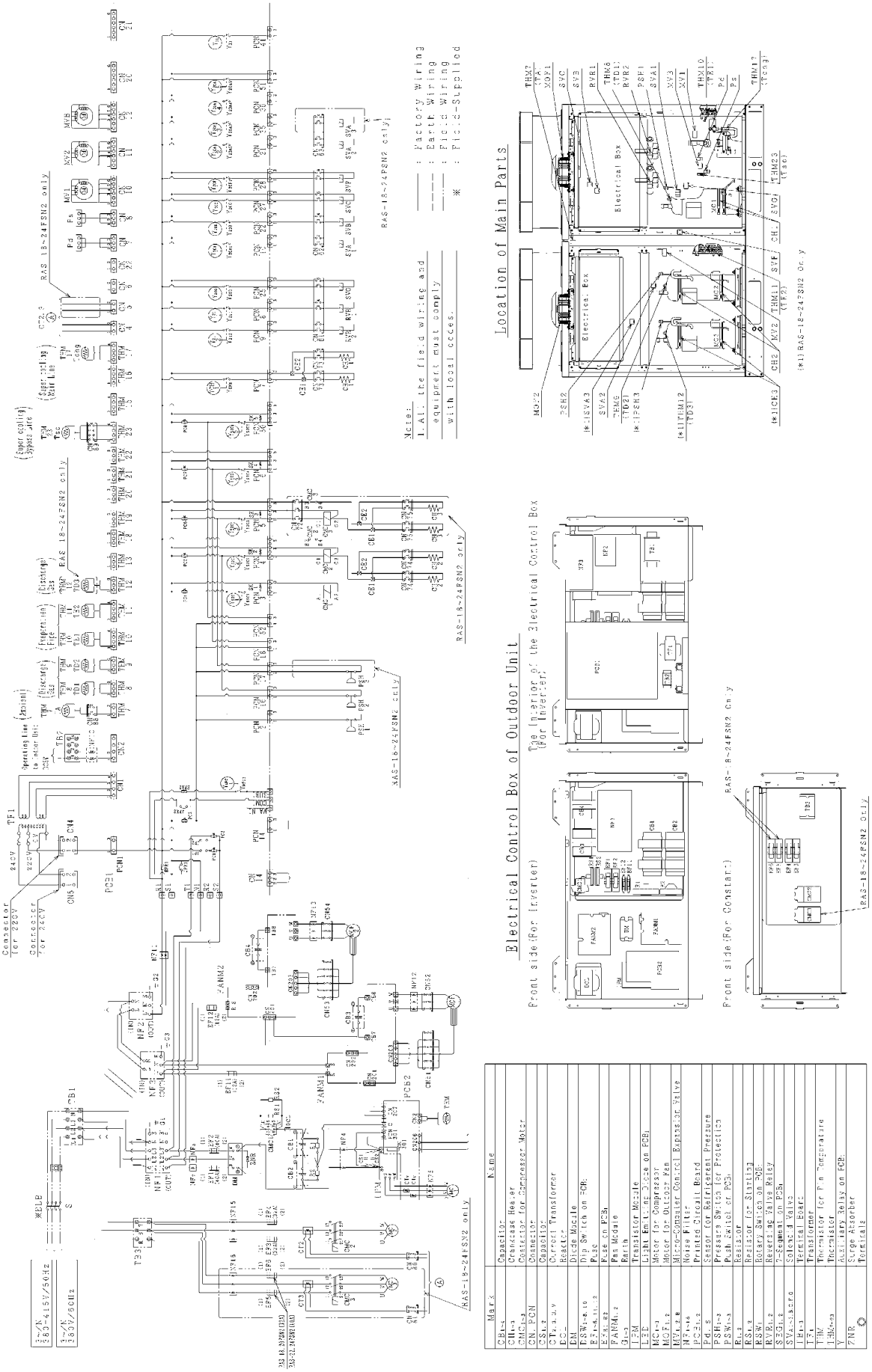

Все каталоги и инструкции здесь: https://splitsystema48.ru/instrukcii-po-ekspluatacii-kondicionerov.html

Electrical wiring diagram for models: RAS-26~42FSN2

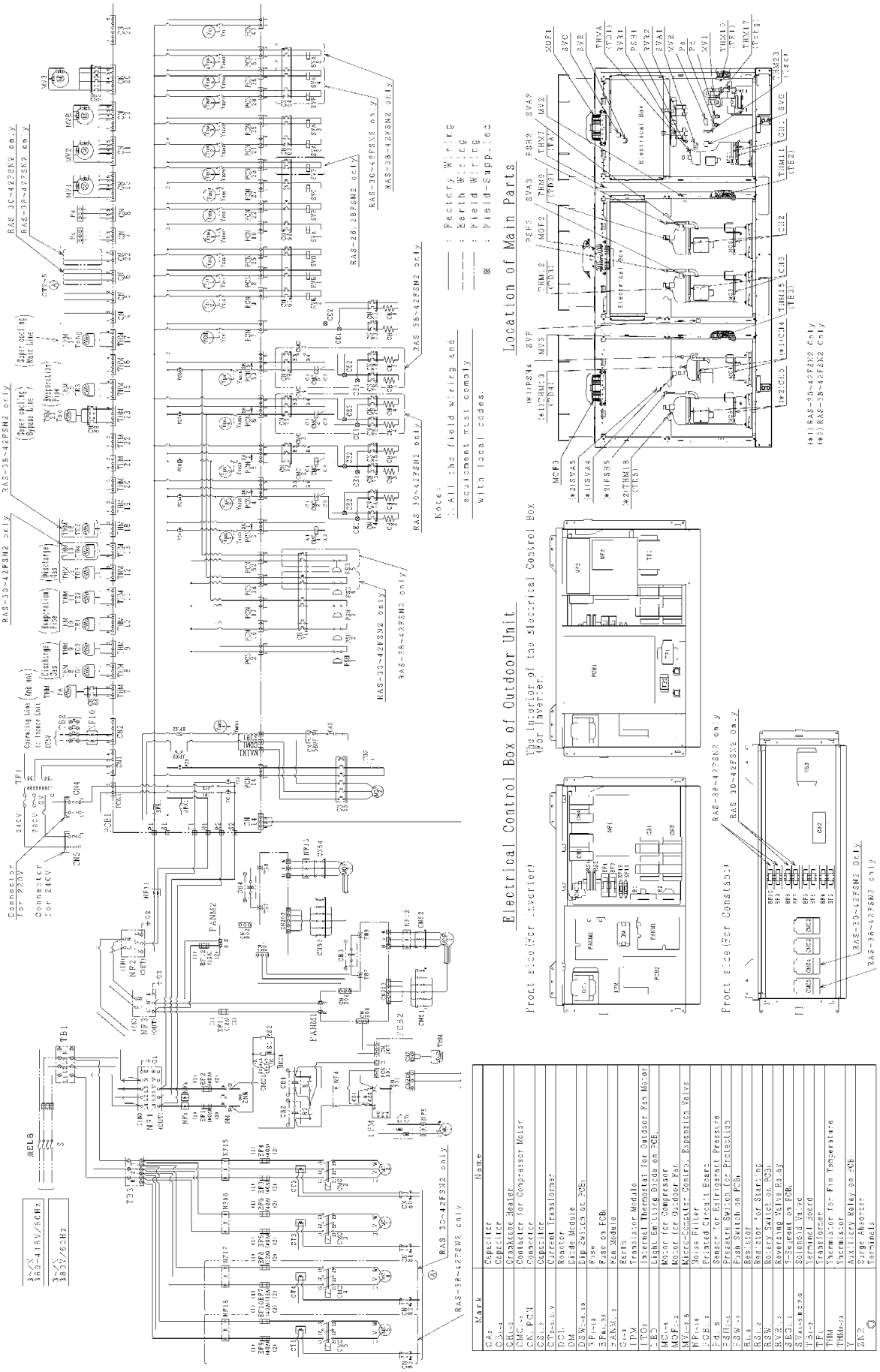

3

Все каталоги и инструкции здесь: https://splitsystema48.ru/instrukcii-po-ekspluatacii-kondicionerov.html

Electrical wiring diagram for models: RAS-44~48FSN2

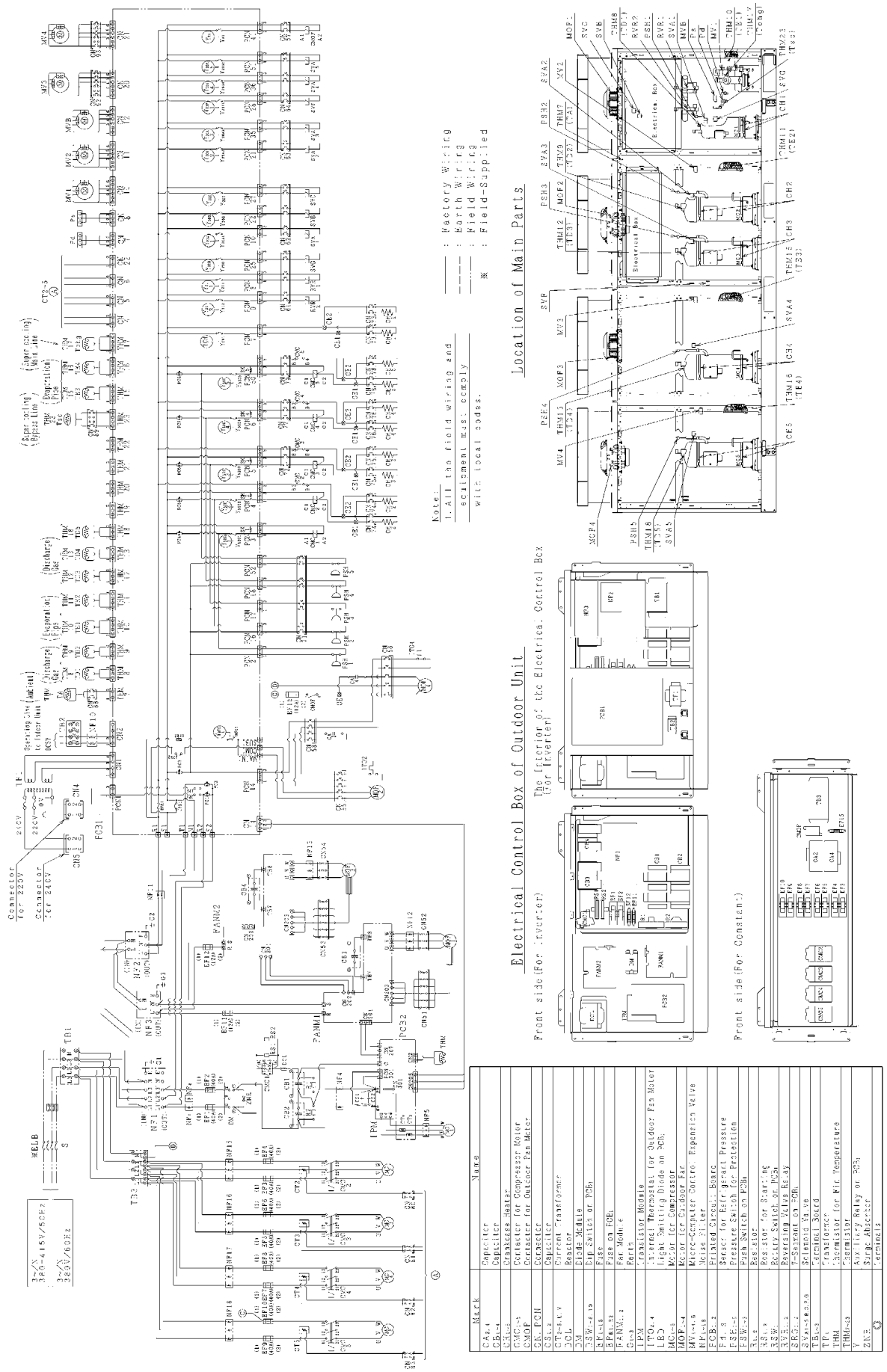

Все каталоги и инструкции здесь: https://splitsystema48.ru/instrukcii-po-ekspluatacii-kondicionerov.html

4. Control system

This chapter presents the control system flowcharts for the Set-FREE FSN2 Outdoor Units series.

Contents

4. Control system 47
4.1. Device control system 48
4.1.1. RAS-8~48FSN2 refrigerant cycle control 48
4.2. Outdoor Units PCB 51
4.2.1. RAS-8~48FSN2 51
4.3. Protection and safety control 52
4.4. Standard operation sequence 53
4.4.1. Cooling process 53
4.4.2. Dry operation 55
4.4.3. Heating process 57
4.4.4. Defrost operation control 59
4.5. Standard control functions 60
4.5.1. Freezing protection during cooling process or dry operation 60
4.5.2. Protection control (in cooling and dry operation) 61
4.5.3. Compressor operation control 62
4.5.4. Outdoor fan control during cooling operation 64
4.6. Restricted control for Outdoor Units 65

Все каталоги и инструкции здесь: https://splitsystema48.ru/instrukcii-po-ekspluatacii-kondicionerov.html

4.1. Device control system

4.1.1. RAS-8~48FSN2 refrigerant cycle control

Control subject	Cooling process		Heating process		Defrost operation
	Purpose	Contents	Purpose	Contents	Contents
Inverter frequency of the compressor	1. Total operation capacity of the indoor unit 2. Refrigerant collection according to piping length 3. Discharge Pre. Pd	1. 8Hz/I.U. HP 2. 10 Hz/I.U.HP (setting DSW6 for piping length setting) 3. Pd ≥ 1,0MPa	1. Total operation capacity of the indoor unit 2. Refrigerant collection according to piping length 3. Pd	1. 8Hz/I.U. HP 2. 10 Hz/I.U.HP (setting DSW6 for piping length setting) 3. Pd ≥ 1,0MPa	All compressors are operated
Change of operating compressor number	1. Capacity control 2. Changeover of total indoor unit capacity	1. The operating comp. numbers are decided by the threshold of the required frequency. (When the number of the Comp. judgement conditions are satisfied.)	1. Capacity control 2. Changeover of total indoor unit capacity	1. The operating comp. numbers are decided by the threshold of the required frequency. (When the number of the Comp. judgement conditions are satisfied.)	–
Opening degree of expansion valve for the outdoor heat exchanger	1. Capacity control 2. Changeover of total indoor unit capacity	Fully open (unused heat exchanger: fully close)	Discharge gas super-heat (TdSH) control	Td0 = Tc + 30 ≤ 90	Fully open
Opening degree of expansion valve for the plate heat exchanger	1. For controlling temp. of discharge gas super-heat (TdSH) 2. For comp. protection	1. Tdo=Tc+30≤95 2. Tdmax>100°C and EVI>1500 pls and over 5 minutes	1. For comp. Protection	Tdmax>100°C and EVo>430 pls continues for 5 min	Discharge gas super-heat (TdSH) control
Opening degree of expansion valve for indoor	1. For controlling temp. of discharge gas super-heat (TdSH) 2. For controlling the temperature difference between the gas pipe and the liquid pipe of the indoor unit heat exchanger 3. For balancing the temperature differences between the gas pipe and the liquid pipe of each indoor unit	1. Tdo=Tc+30≤95 2. Temperature difference between the gas pipe and the liquid pipe of each indoor unit = 4 ºC	1. For controlling temp. difference between air outlet and air inlet of I.U 2. For balancing the temp. difference between air outlet and air inlet of I.U	Air outlet temp. - air inlet temp. ≤ 24 ºC	Opening degree is fixed
Outdoor fan	Fan controlling discharge pressure (Pd)	2,5≤Pd≤2,9MPa PWM control by DC motor + constant speed fan motor	Fan controlling outdoor air temp.	Outdor air temp. PWM control by DC fan motor + constant speed fan motor	Stop

Все каталоги и инструкции здесь: https://splitsystema48.ru/instrukcii-po-ekspluatacii-kondicionerov.html

Control subject	Cooling process		Heating process		Defrost operation
	Purpose	Contents	Purpose	Contents	Contents
Solenoid valve equalized pressure (SVA)	1. For equalizing the pressure of the inverter compressor during the stop	In case of stopping inverter comp. after operation	For controlling inner pressure of stopagge comp.	In case of stopping inverter comp. after operation	–
Solenoide valve for gas bypass (SVB)	1. Discharge gas temp. (Td) keeping 2. Discharge pre. (Pd) protection	1. Turn ON in comp. operation. 2. ON: Pd>3,6(MPa)	1. Discharge gas temp. (Td) keeping 2. Discharge pre. (Pd) protection	1. Turn ON in comp. operation. 2. ON: Pd>3,6(MPa)	–
Solenoide valve for liquid bypass (SVC)	Diacharge pre. (Pd.) decrease control	ON: at start up operation ON: Pd<2,3 (MPa)	–	–	–
Solenoid valve for the oil return (SVF)	For controlling temp. oil circulation volume from the oil separator to each compressor	1. Turn ON in comp. operation 2. Turn OFF in comp. stoppage	For controlling temp. oil circulation volume from the oil separator to each compressor	1. Turn ON in comp. operation 2. Turn OFF in comp. stoppage	Same as cooling/ heating operation
Solenoid valve for shut-off from high and low pressure at refrigerant collection (SVG)	For refrigerant collection	1. Turn ON in Comp. Operation 2. Turn OFF in comp. stoppage	For refrigerant collection	1. Turn ON in comp. operation 2. Turn OFF in comp. stoppage	OFF

I.U.: Indoor Unit
Tc / Te: Condensing Temperature / Evaporating Temperature
Td: Discharge Temperature
Tl: Liquid Temperature
Tg: Gas Temperature
Cap: Capacity
Temp.: Temperature
comp.: Compressor

Все каталоги и инструкции здесь: https://splitsystema48.ru/instrukcii-po-ekspluatacii-kondicionerov.html

The figure below shows the outline of the control system

Example: RAS-48FSN2 + Indoor unit

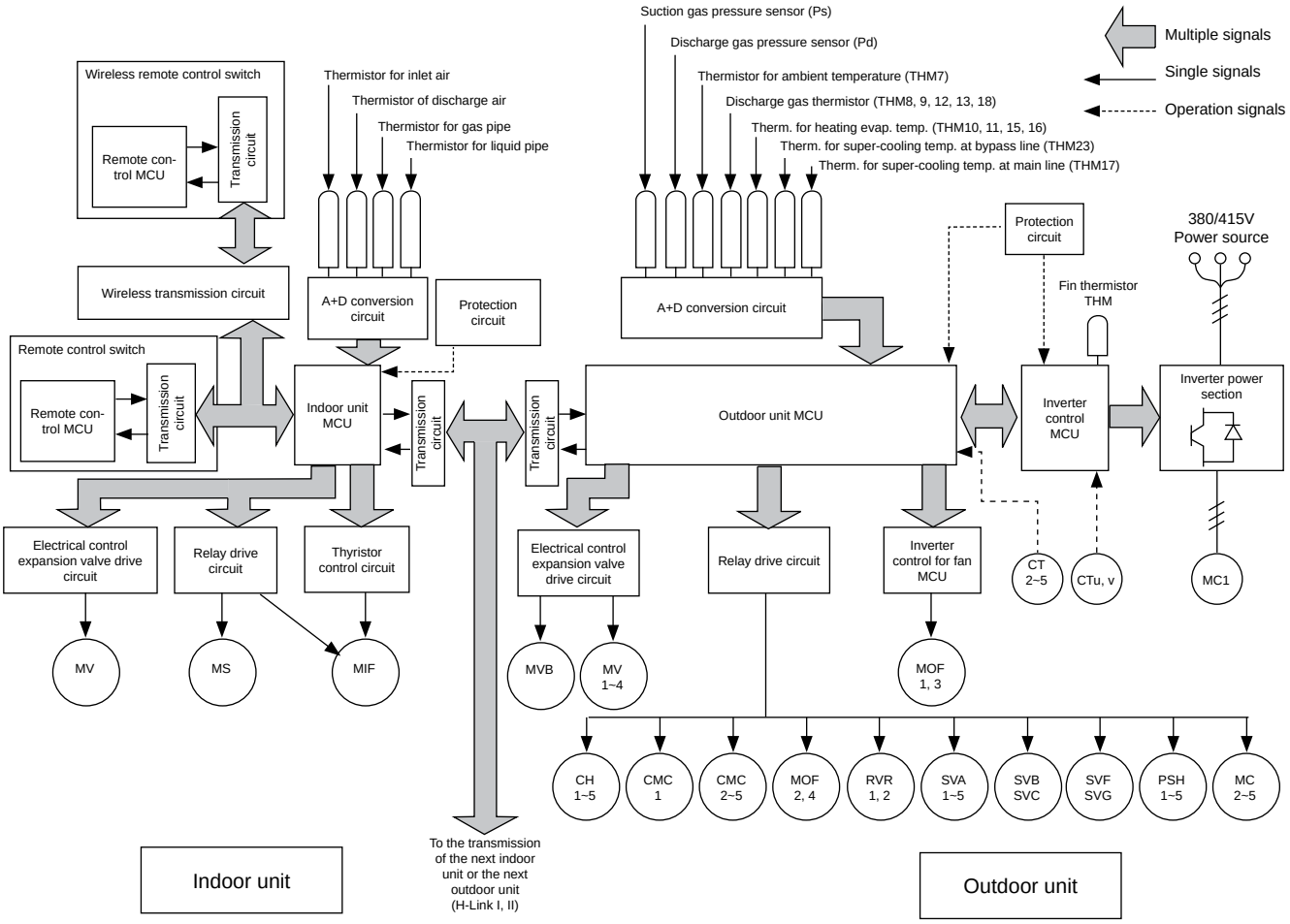

Symbol	Name
MC_1	DC Motor (for Inverter Compressor)
$MC_{2\sim5}$	AC Motor (for Constant Speed Compressor)
$MOF_{1,3}$	DC Motor (for Outdoor Fan)
$MOF_{2,4}$	AC Motor (for Outdoor Fan)
MIF	Motor (for Indoor Fan)
MS	Motor (for Auto-Louver)
MV	Electronic Expansion Valve (for Indoor Unit)
$MV_{1\sim4}$	Electronic Expansion Valve (for Outdoor Unit)
MVB	Electronic Expansion Valve for Plate Heat Exchanger
$CMC_{1\sim5}$	Magnetic Contactor for Compressor

Symbol	Name
$SVA_{1\sim5}$	Solenoid Valve
SVB, SVC, SVF, SVG	Solenoid Valve
$RVR_{1,2}$	Reversing Valve
$PSH_{1\sim5}$	High Pressure Switch
Ps	Suction Gas Pressure Sensor
Pd	Discharge Gas Pressure Sensor
CTu, v, $_{2\sim5}$	Current Sensor
$CH_{1\sim5}$	Crankcase Heater

Все каталоги и инструкции здесь: https://splitsystema48.ru/instrukcii-po-ekspluatacii-kondicionerov.html

4.2. Outdoor Units PCB

4.2.1. RAS-8~48FSN2

■ PCB drawing

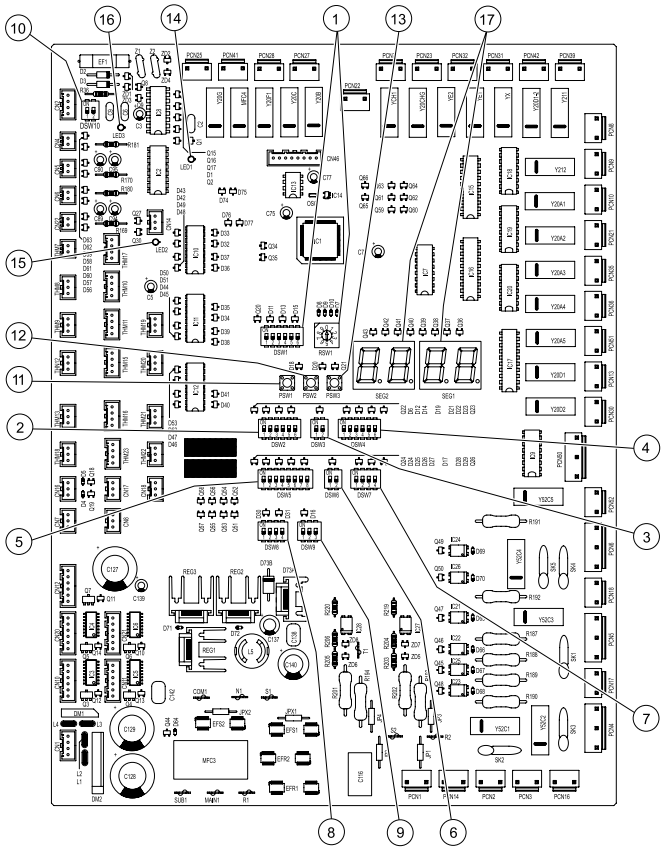

LED INDICATION		
14	LED1 (Red)	Power Source for PCB1 Normal Condition: Activated Abnormal Condition: Deactivated
15	LED2 (Green)	This LED2 indicates the transmission state between the PCB1 and PCB2. Normal Condition: Flickering Abnormal Condition: Activated or Deactivated
16	LED3 (Yellow)	This LED3 indicates the transmission state between the indoor unit and outdoor unit. Normal Condition: Flickering Abnormal Condition: Activated or Deactivated

No.	Part Name	Contents of functions
1	DSW1 & RSW1	Setting of Outdoor Unit Number
2	DSW2	Setting of Capacity Code Outdoor unit capacity is set according to nominal capacity (HP).
3	DSW3	Setting of Height Difference. The height difference between outdoor and indoor units is set.
4	DSW4	• Test Running for Cooling or Heating An outdoor unit can be run for testing. When testing has been finished, reset the function. • Forced Stoppage of Compressor When performing test running or inspection, compressors can be forcedly stopped to ensure safety. • Operation for Exchange Compressor
5	DSW5 (Optional Function)	• No.1 to No.5 of Dip Switch 5 are same as the compressor No. Select a compressor that is not used and then set as shown below. Ex: DSW5 No.2 OFF => Comp. No.2 OFF • Judgement for Refrigerant Charge • Setting of External Input Control Function No.

No.	Part Name	Contents of functions
6	DSW6	Setting of Piping Length. The total piping length between the outdoor unit and indoor unit is set.
7	DSW7	Setting of Power Supply
8	DSW8	Setting of Unit Model Code
9	DSW9	Not Prepared
10	DSW10	Setting of Transmitting
11	PSW1	Manual Defrosting Switch. The defrosting operation is manually available under the forced defrosting area.
12	PSW2	Check Switches. When checking units, checking items can be selected by these switches.
13	PSW3	
17	SEG1 SEG2	These indicate the following: "alarm", "protective safety device has tripped" or "checking items".

4

Все каталоги и инструкции здесь: https://splitsystema48.ru/instrukcii-po-ekspluatacii-kondicionerov.html

4.3. Protection and safety control

4.3.1.Compressor protection

The following devices and their combinations protect the compressor

High-Pressure switch	This switch cuts out the operation of the compressor when the discharge pressure exceeds the setting.
Oil heater	This band heater protects against the oil carry-over during the cold starting, as the band heater is energized while the compressor is stopped.
Fan motor protection	Internal thermostat that is embedded in the fan motor winding: this internal thermostat cuts out the operation of the fan motor when the temperature of the fan motor winding exceeds the setting.

Safety and control device setting for the outdoor units

■ **RAS-FSN2**

Model		**RAS-8 RAS-10 RAS-12**	**RAS-14 RAS-16**	**RAS-18 RAS-20**	**RAS-22 RAS-24**	**RAS-26 RAS28**	**RAS-30 RAS-32 RAS-34 RAS-36**	**RAS-38 RAS-40 RAS-42**	**RAS-44 RAS-46 RAS-48**
For Compressor Pressure Switches High Cut-Out	MPa	Automatic Reset, Non-Adjustable (each one for each compressor) 4,15 -0,05/-0,15							
Cut-In	MPa	3.20 ± 0.15							
Fuse	A	40x2	40x2 + 32x2	40x2 + 32x2 + 32x2	40x2 + 32x2 + 40x2	40x2 + 40x2 + 40x2	40x2 + 40x2 + 40x2 + 32x2	40x2 + 40x2 +40x2 + 32x2 + 40x2	40x2 + 40x2 + 40x2 + 40x2 + 40x2
Oil Heater Capacity	W	40x2	40x4	40x6			40x8	40x10	
CCP Timer		Non-Adjustable							
Setting Time	min	3							
For Condenser Fan Motor Internal Thermostat		Automatic Reset, Non-Adjustable (each one for each motor)							
Cut-Out Cut-In	ºC ºC	–	–	–	–	145±5 94±15			
For DC fan module Fuse Capacity	A	12x1	12x2						

Все каталоги и инструкции здесь: https://splitsystema48.ru/instrukcii-po-ekspluatacii-kondicionerov.html

4.4. Standard operation sequence

4.4.1. Cooling process

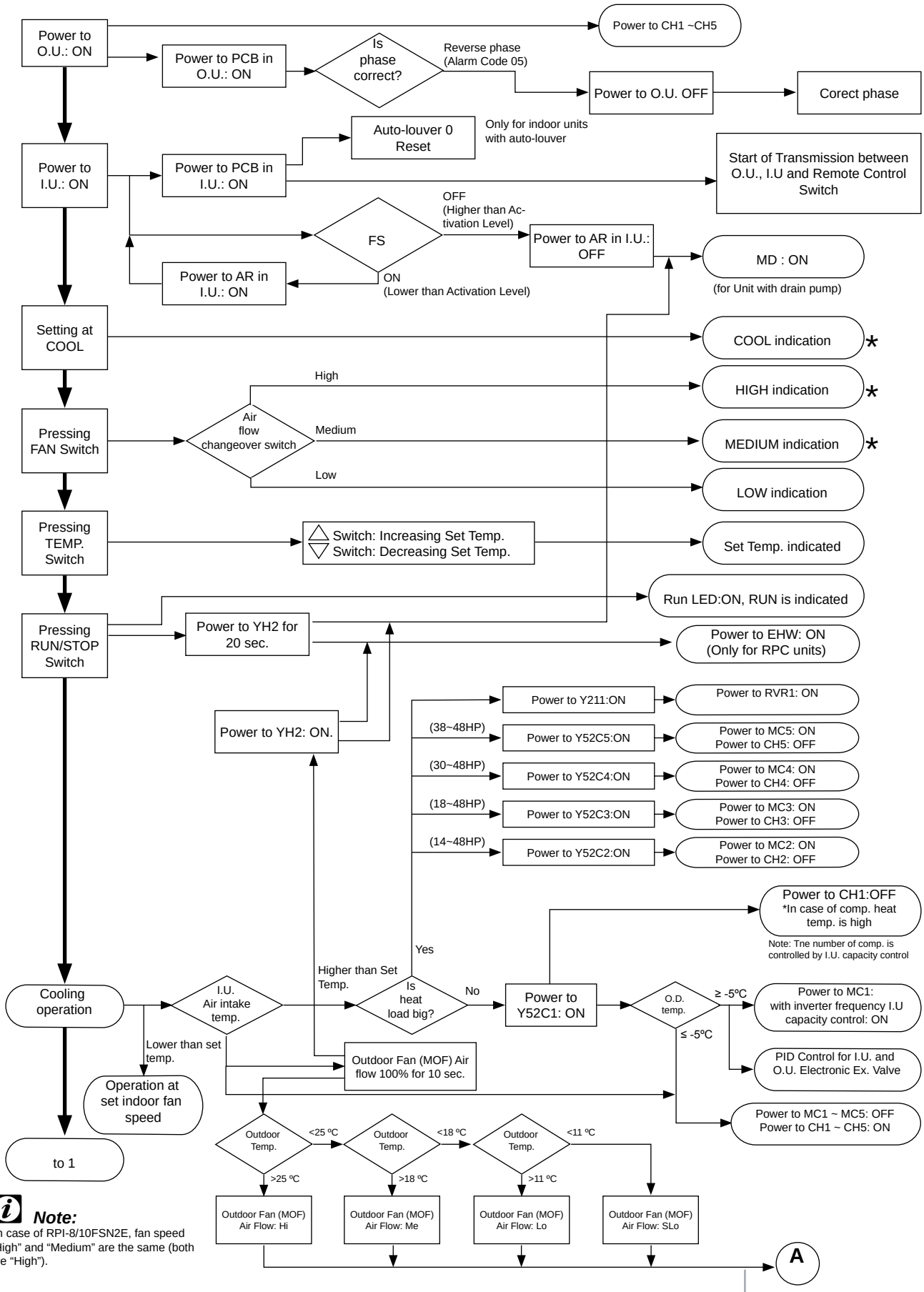

Note:
In case of RPI-8/10FSN2E, fan speed "High" and "Medium" are the same (both are "High").

4

Все каталоги и инструкции здесь: https://splitsystema48.ru/instrukcii-po-ekspluatacii-kondicionerov.html

Cooling process (cont.)

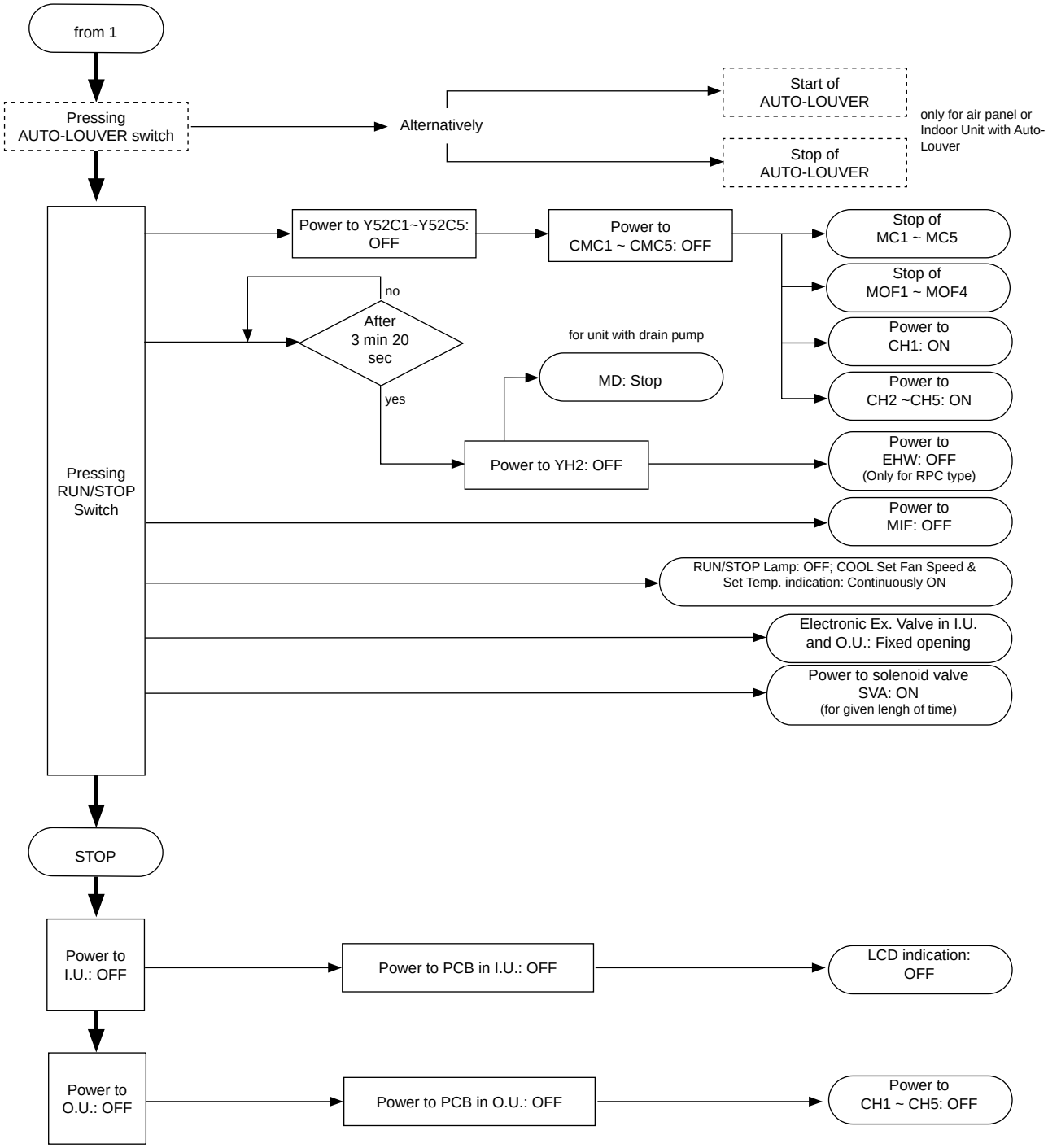

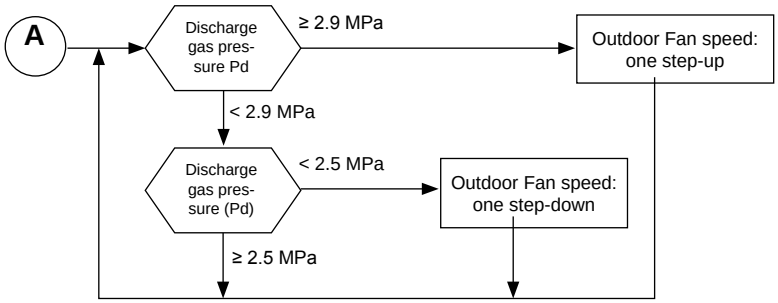

Все каталоги и инструкции здесь: https://splitsystema48.ru/instrukcii-po-ekspluatacii-kondicionerov.html

4.4.2. Dry operation

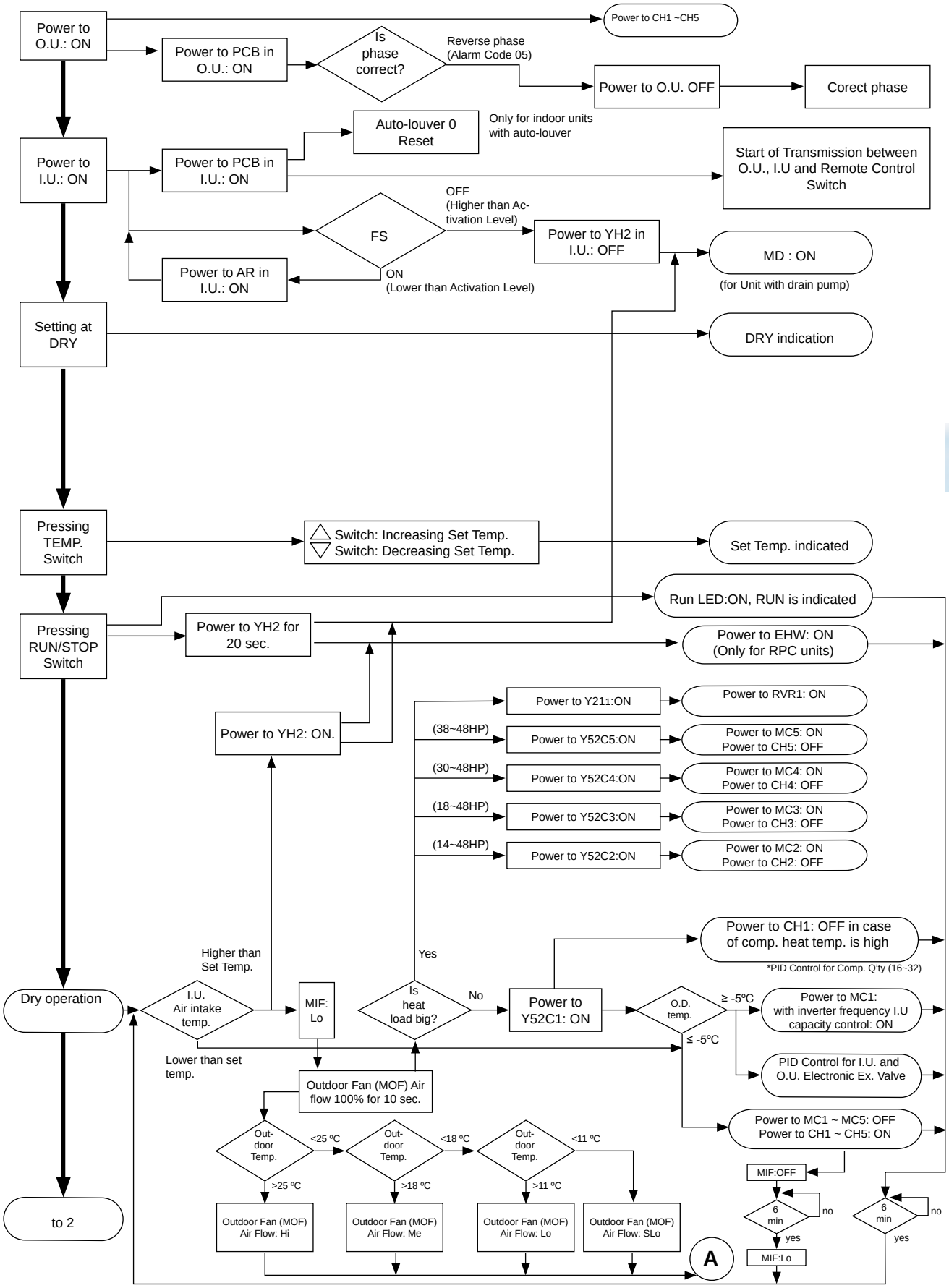

Все каталоги и инструкции здесь: https://splitsystema48.ru/instrukcii-po-ekspluatacii-kondicionerov.html

Dry operation (cont.)

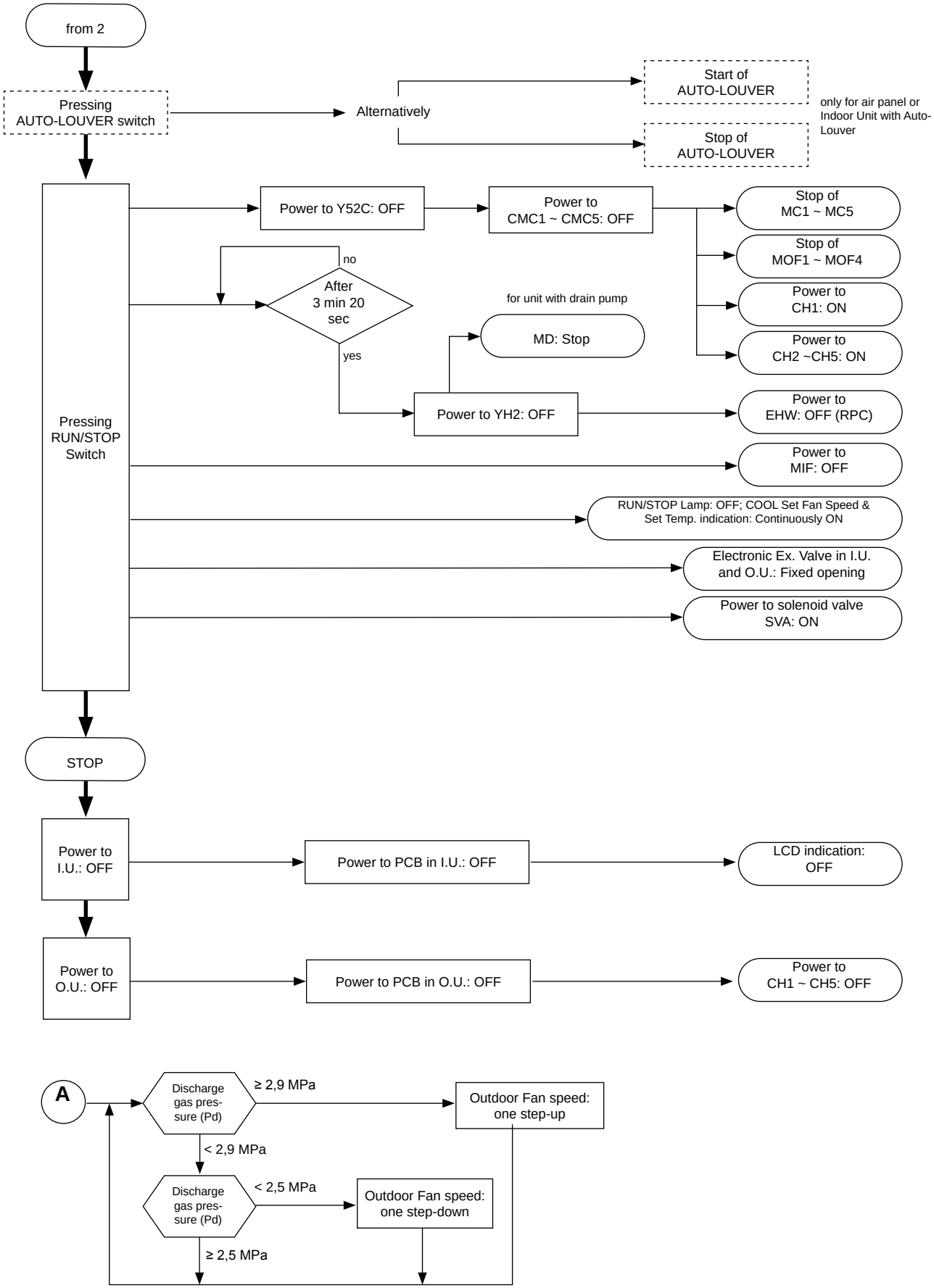

Все каталоги и инструкции здесь: https://splitsystema48.ru/instrukcii-po-ekspluatacii-kondicionerov.html

4.4.3. Heating process

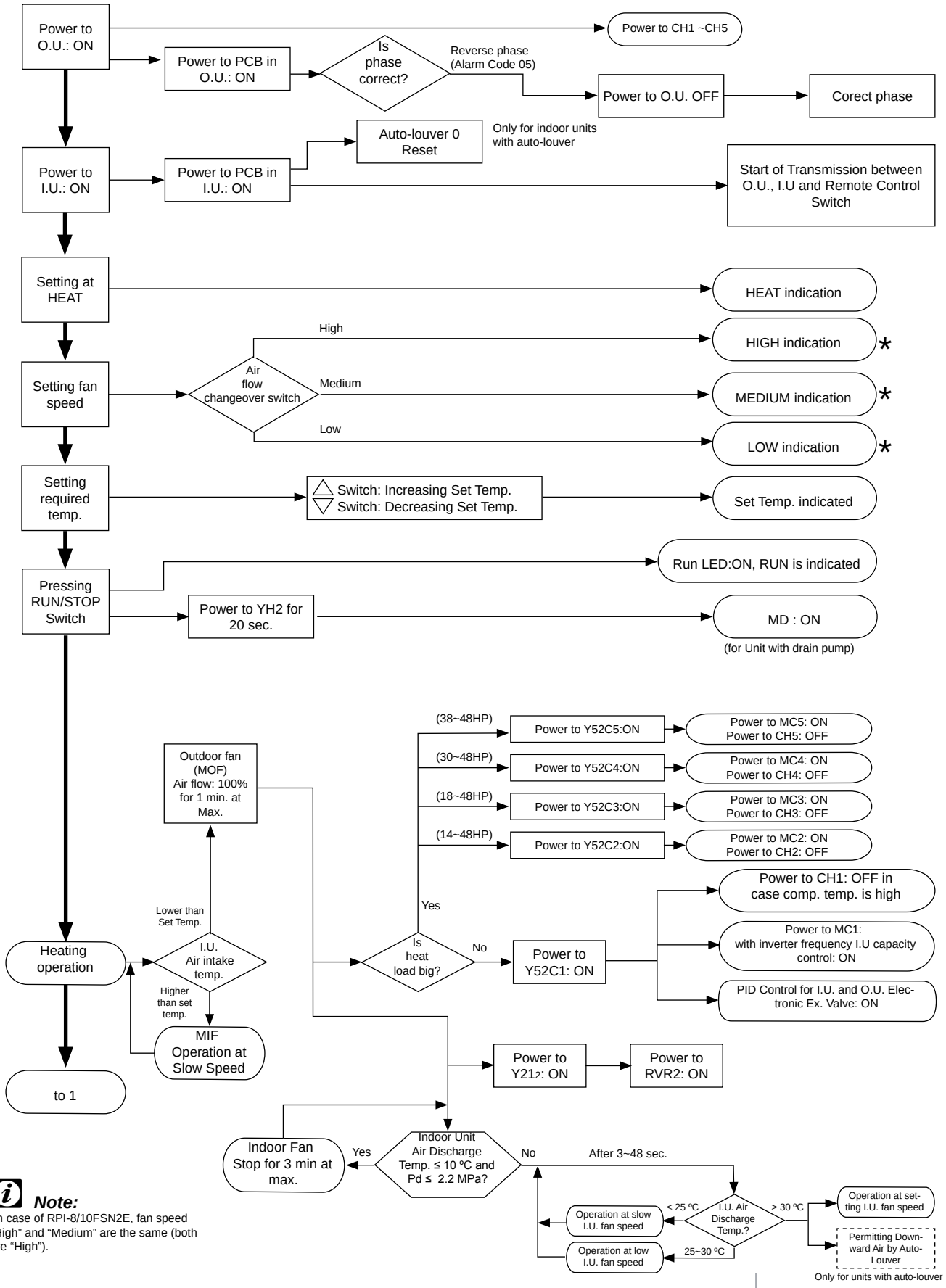

Note:
In case of RPI-8/10FSN2E, fan speed "High" and "Medium" are the same (both are "High").

Все каталоги и инструкции здесь: https://splitsystema48.ru/instrukcii-po-ekspluatacii-kondicionerov.html

Heating process (cont.)

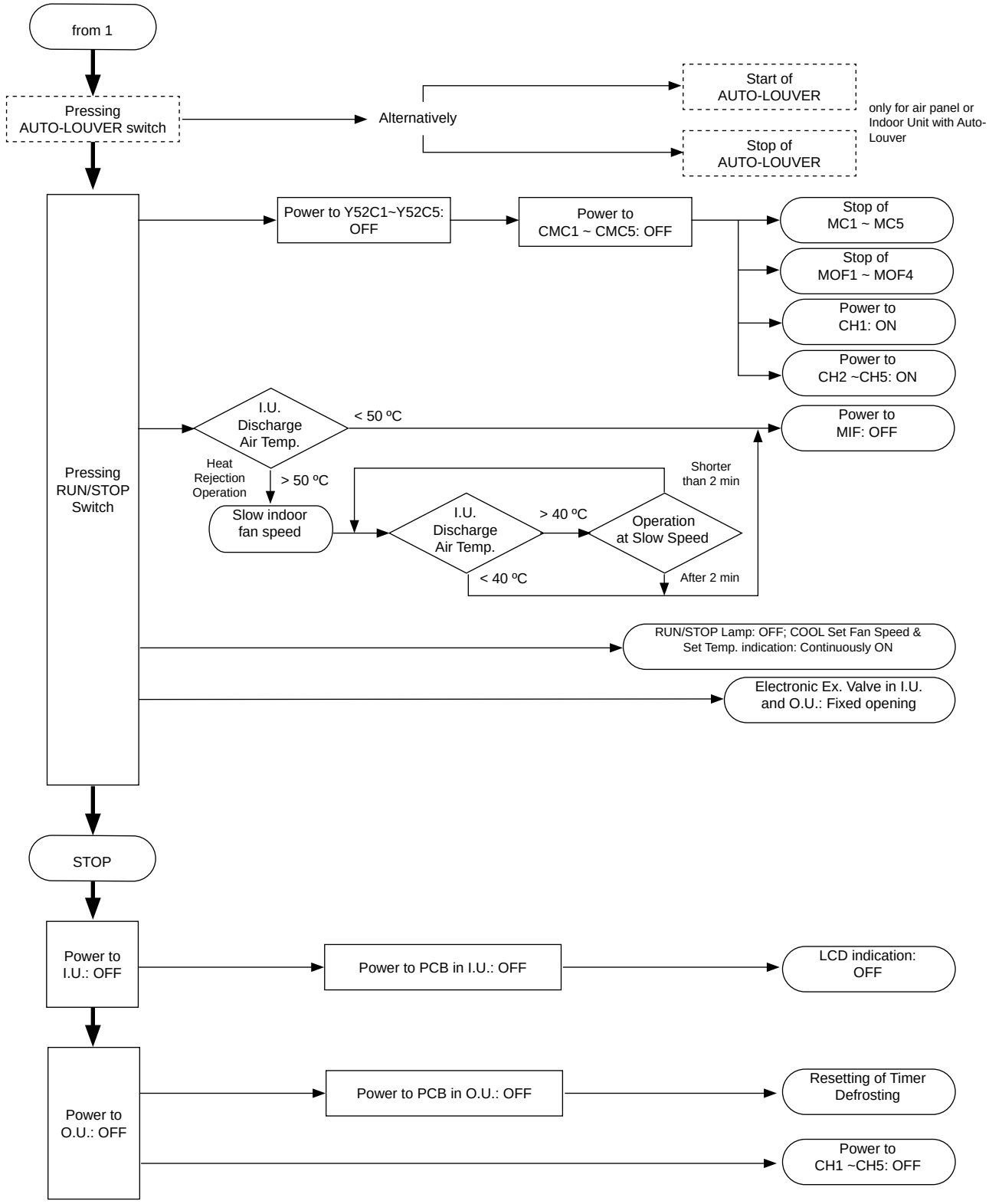

Все каталоги и инструкции здесь: https://splitsystema48.ru/instrukcii-po-ekspluatacii-kondicionerov.html

4.4.4. Defrost operation control

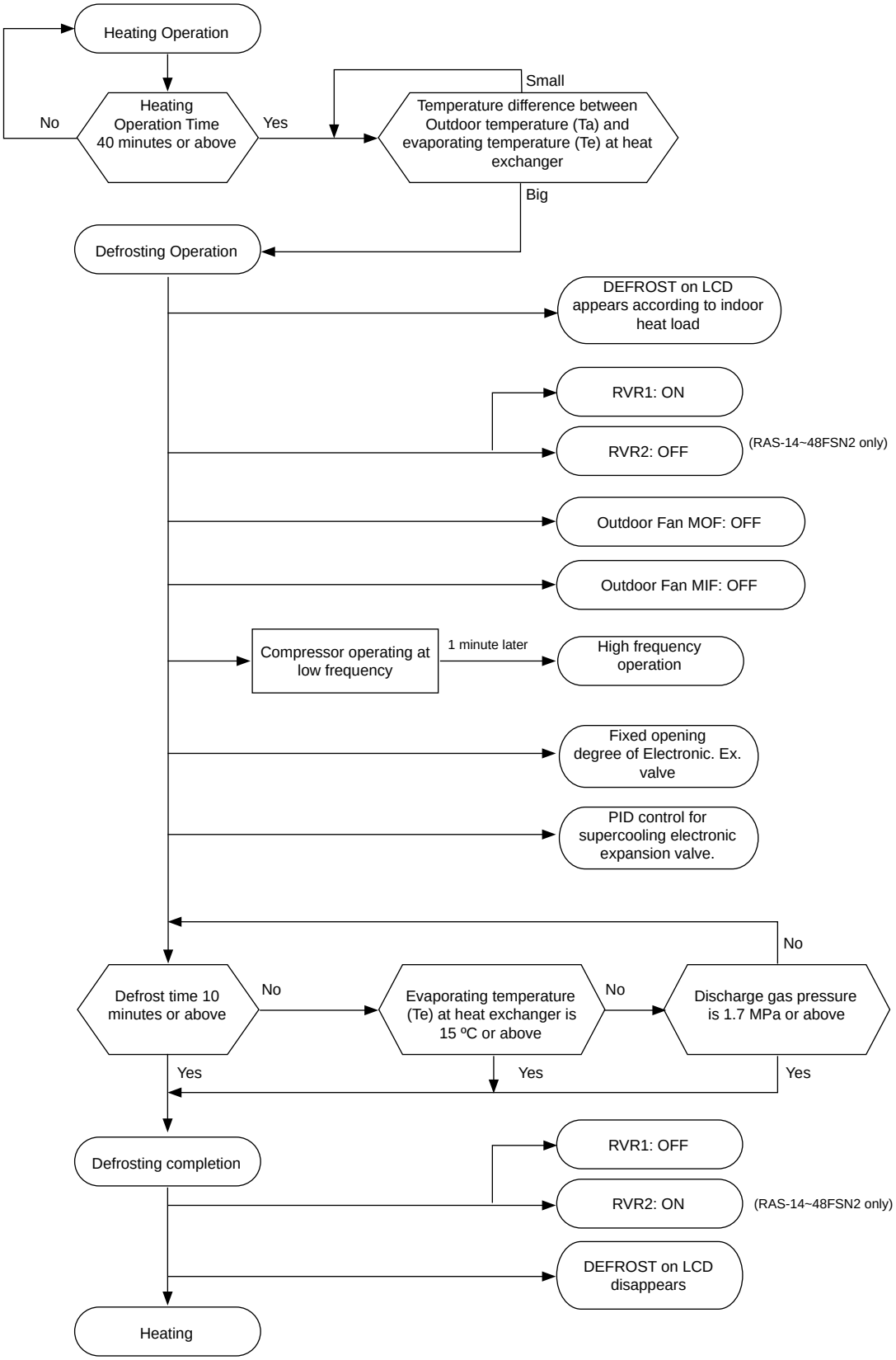

4

Все каталоги и инструкции здесь: https://splitsystema48.ru/instrukcii-po-ekspluatacii-kondicionerov.html

4.5. Standard control functions

4.5.1. Freezing protection during cooling process or dry operation

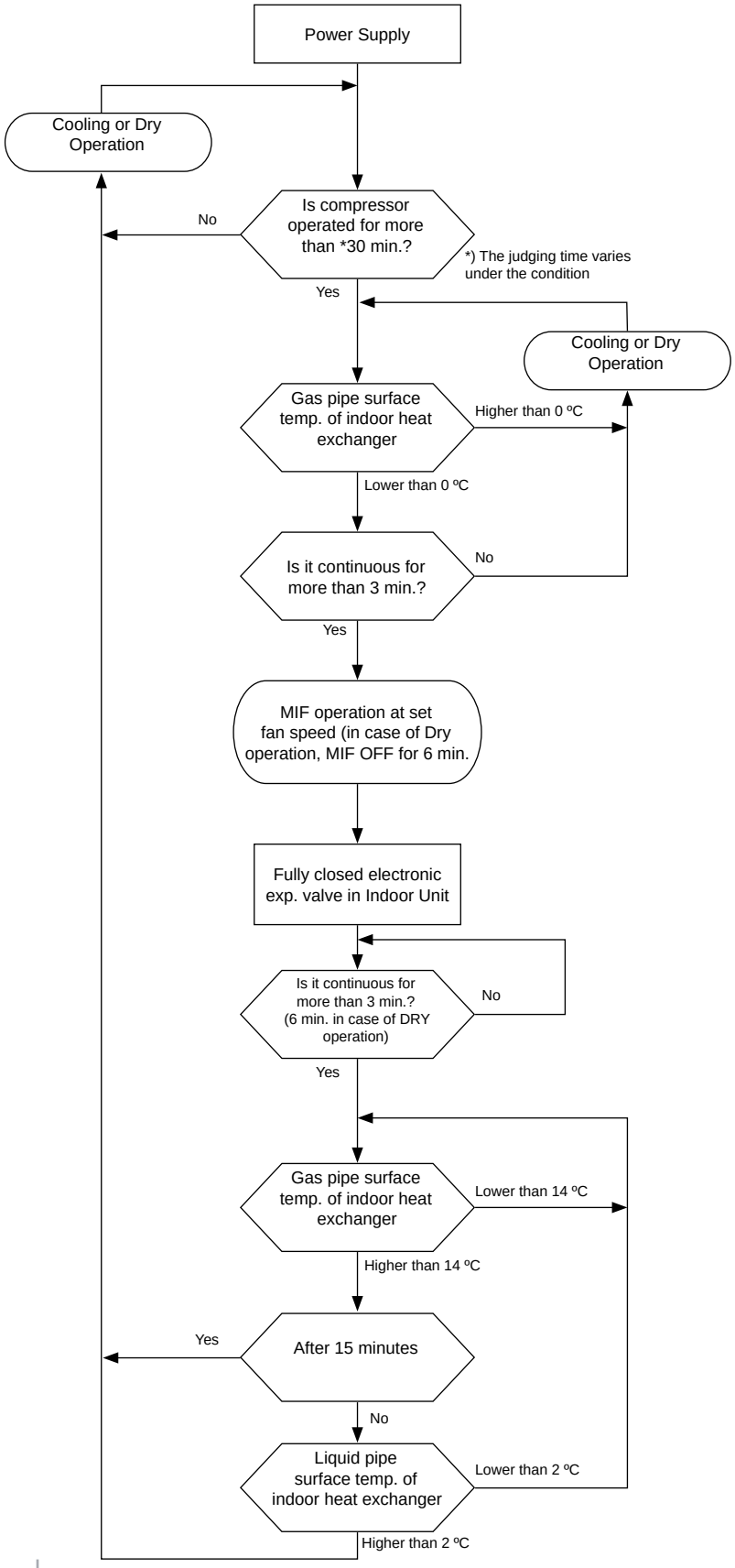

Все каталоги и инструкции здесь: https://splitsystema48.ru/instrukcii-po-ekspluatacii-kondicionerov.html

4.5.2. Protection control (in cooling and dry operation)

– Electronic expansion valve control for supercooling circuit

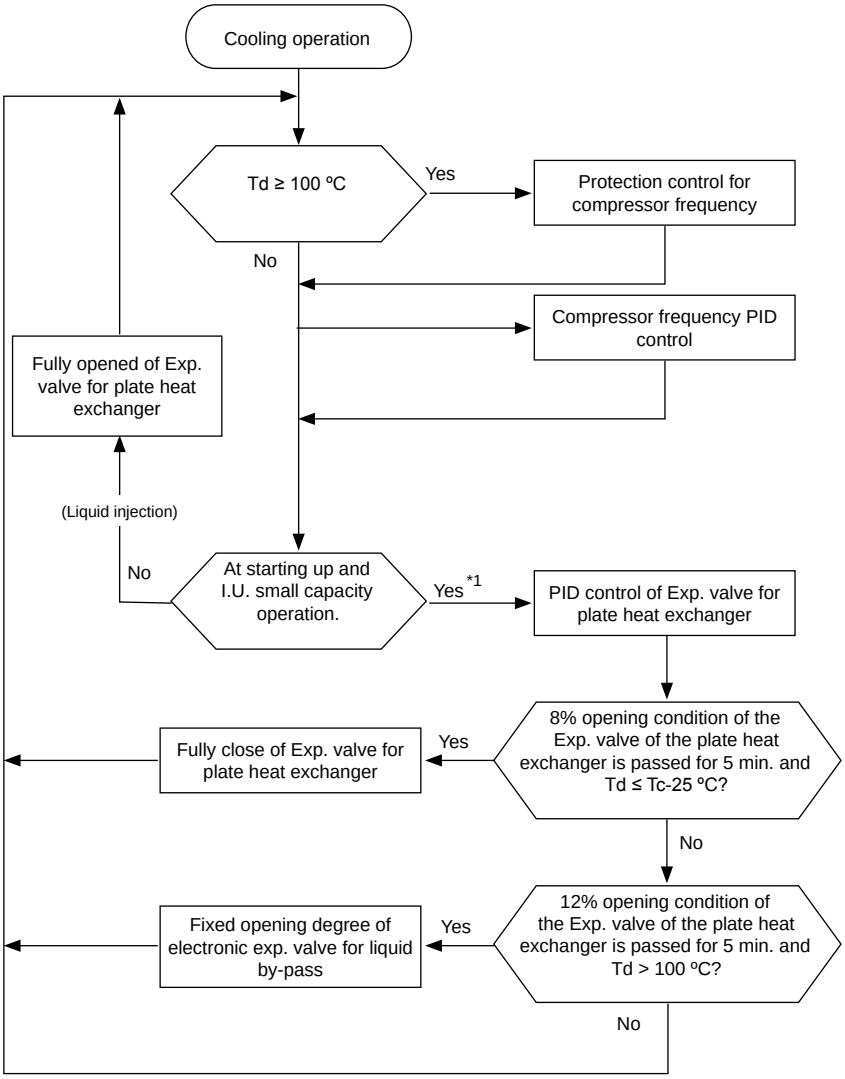

NOTE:

1. *Adecuate temperatura area for Td (by Exp. valve PID control)*

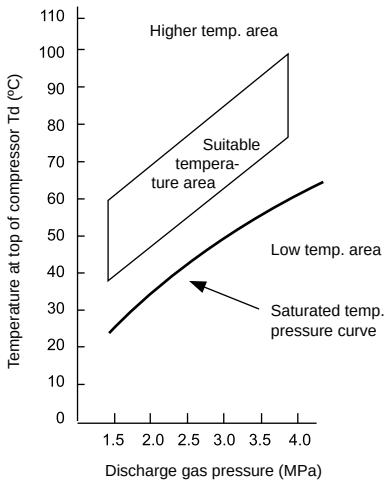

Все каталоги и инструкции здесь: https://splitsystema48.ru/instrukcii-po-ekspluatacii-kondicionerov.html

4.5.3. Compressor operation control

RAS-14/16FSN2

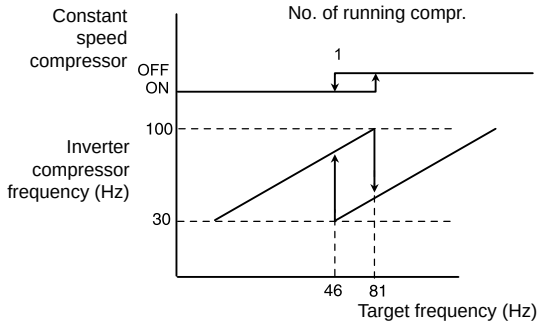

RAS-18/20FSN2

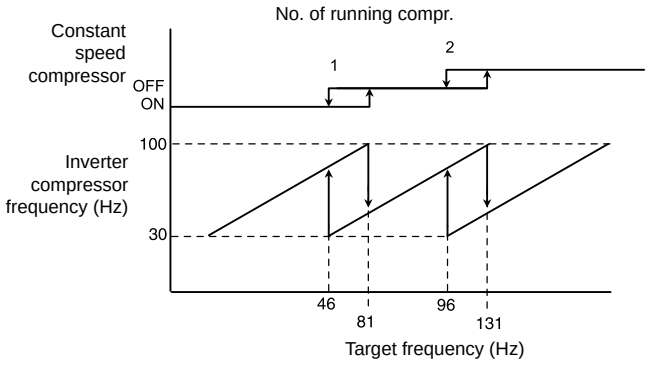

RAS-22/24FSN2

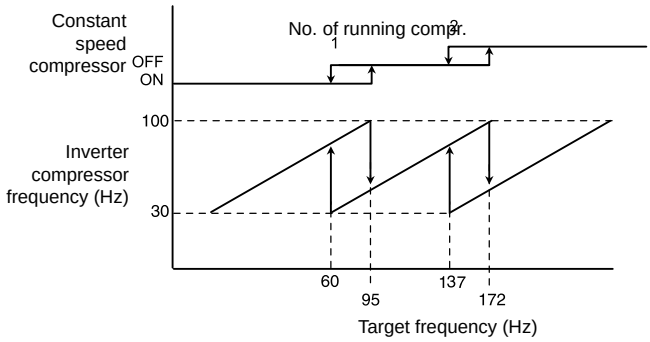

RAS-26/28FSN2

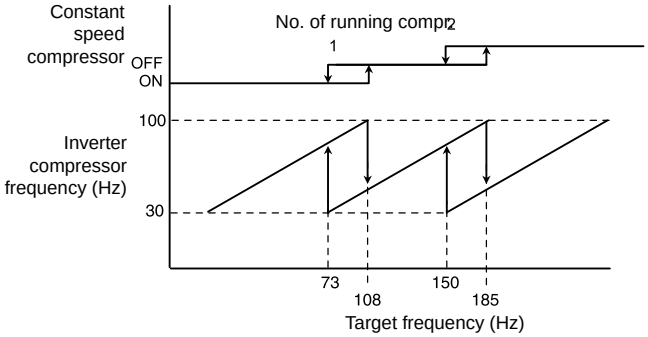

RAS-30~36FSN2

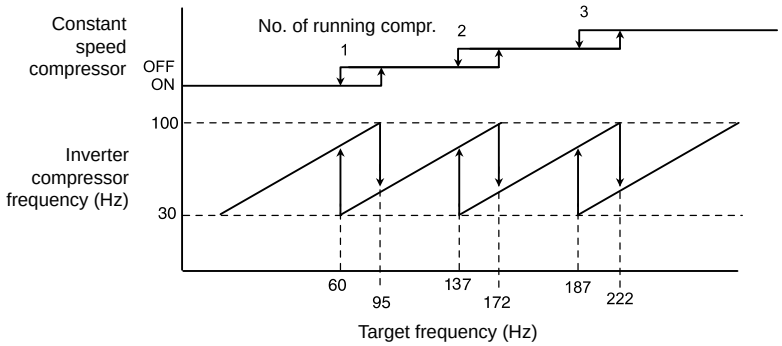

Все каталоги и инструкции здесь: https://splitsystema48.ru/instrukcii-po-ekspluatacii-kondicionerov.html

RAS-38~42FSN2

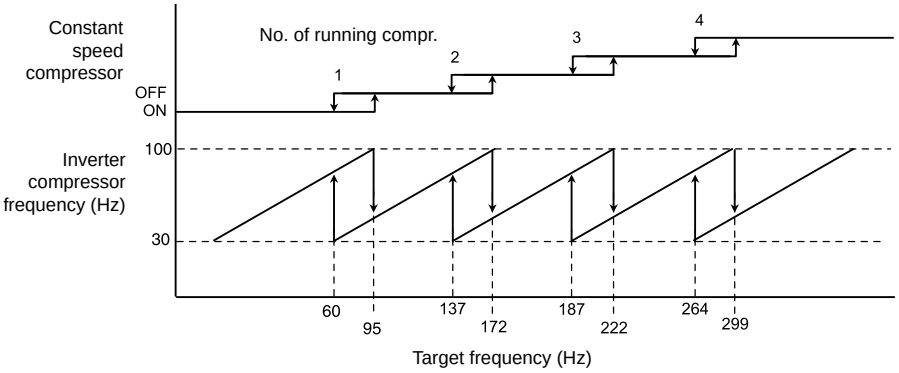

RAS-44~48FSN2

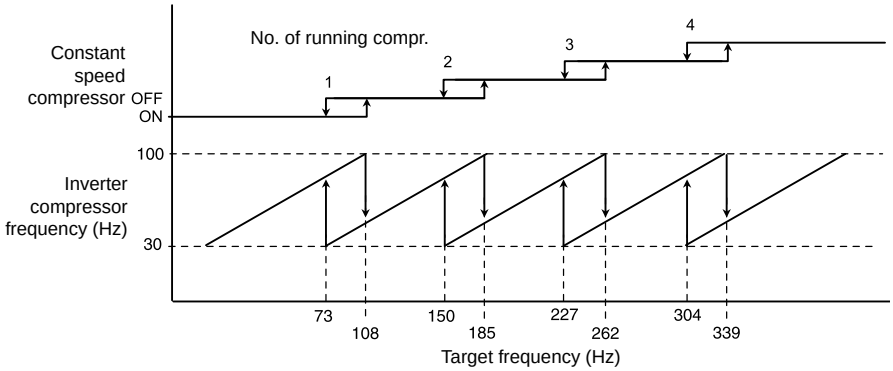

4

Все каталоги и инструкции здесь: https://splitsystema48.ru/instrukcii-po-ekspluatacii-kondicionerov.html

4.5.4. Outdoor fan control during cooling operation

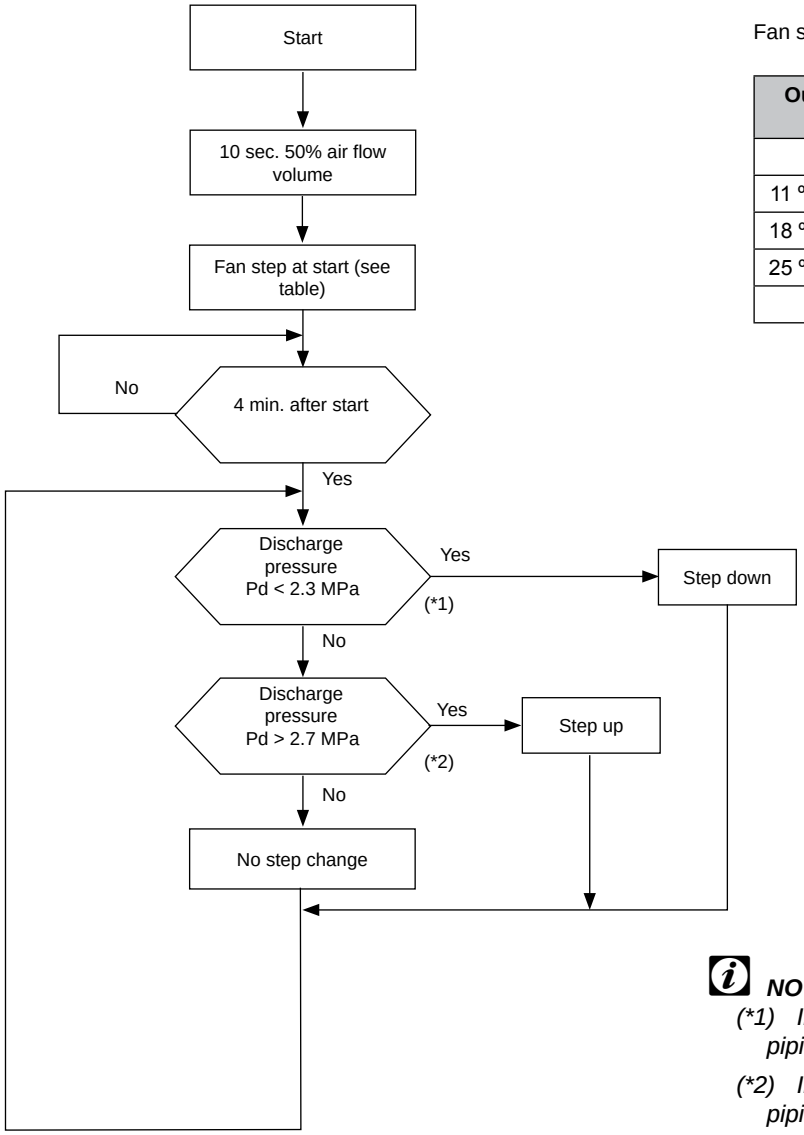

Fan step at start

Outlet air temp. (Tao)	Air flow (%)
Tao < 5 ºC	15
11 ºC ≤ Tao < 18 ºC	40
18 ºC ≤ Tao < 25 ºC	52
25 ºC ≤ Tao < 33 ºC	90
33 ºC ≤ Tao	100

NOTES:

*(*1) In case that DSW3-1 (DIP switch for setting piping length, lift) is ON, Pd < 2.5 MPa*

*(*2) In case that DSW3-1 (DIP switch for setting piping length, lift) is OFF, Pd < 2.9 MPa*

Все каталоги и инструкции здесь: https://splitsystema48.ru/instrukcii-po-ekspluatacii-kondicionerov.html

4.6. Restricted control for Outdoor Units

1. Purpose:

   Minimize the frequency of the operation stoppage because of an alarm.

2. Procedure:

   Improving the protection control after the retry operation. (Protection control is activated before reaching of setting value for each protection control).

   Restricted control

3. Applicable case:
   - Decrease in the discharge gas superheat
   - Increase in the discharge gas temperature
   - Pressure ratio decrease
   - Discharge pressure increase
   - Inverter overcurrent

Example:

Discharge gas temp. increase protection control

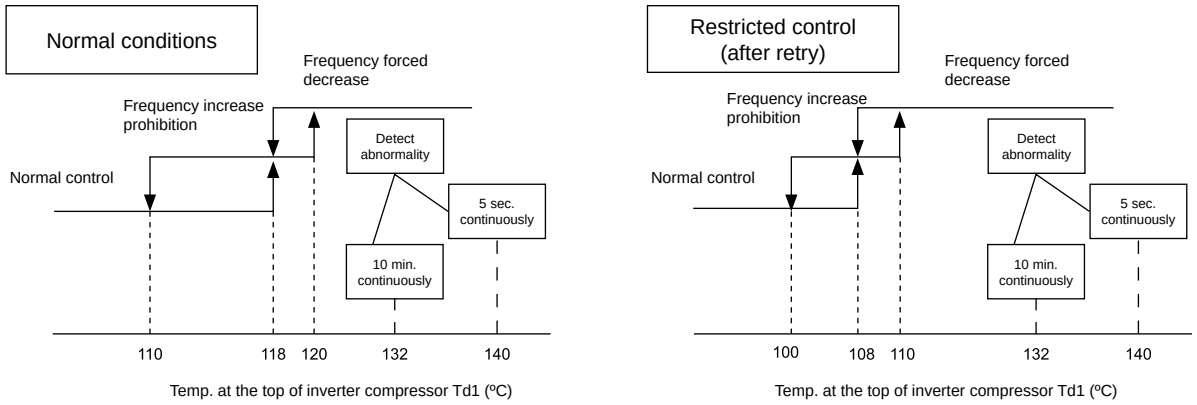

Discharge pressure increase protection control

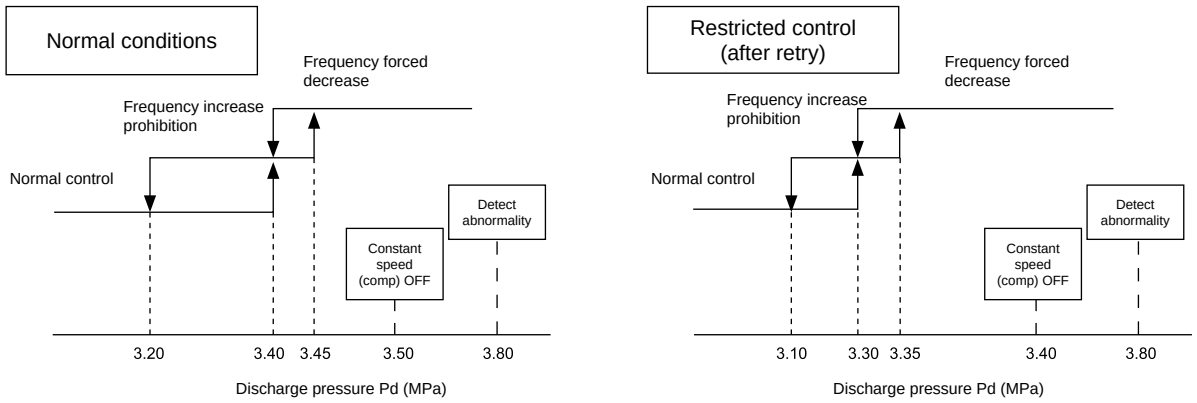

Все каталоги и инструкции здесь: https://splitsystema48.ru/instrukcii-po-ekspluatacii-kondicionerov.html

Все каталоги и инструкции здесь: https://splitsystema48.ru/instrukcii-po-ekspluatacii-kondicionerov.html

HITACHI
Inspire the Next

5. Available optional functions

Contents

5. Available optional functions 67

5.1. Outdoor units 68

5.1.1. Setting of external input and output functions 68
5.1.2. Description of external input signals 70
5.1.3. Description of external output signals 73
5.1.4. Optional functions 75

5

Все каталоги и инструкции здесь: https://splitsystema48.ru/instrukcii-po-ekspluatacii-kondicionerov.html

5.1. Outdoor units

5.1.1. Setting of external input and output functions

On the outdoor unit printed circuit board, there are three input terminals to receive external signals and two output terminals to send signals outwards. These signals are available by setting as shown below.

Control Function No. (SEG1)	Input	Output
1	Fixing Heating Operation Mode	Operation Signal
2	Fixing Cooling Opeation Mode	Alarm Signal
3	Demand Stoppage	Compressor ON Signal
4	Snow Sensor (Outdoor fan ON/OFF)	Defrosting Signal
5	Forced Stoppage	--
6	Demand Current Control 60%	--
7	Demand Current Control 70%	--
8	Demand Current Control 80%	--
9	Demand Current Control 100%	--

Each input terminal and output terminal setting as shown below.

Input/Output Terminal Indication (SEG2)	Connector (Pin No.)	Setting Function (Control Function No.)
Input 1	CN17 (1-2)	Fixed Heating Operation Mode (1) *
Input 2	CN17 (2-3)	Fixed Cooling Operation Mode (2) *
Input 3	CN18 (1-2)	Demand Stoppage (3) * Snow Sensor (Outdoor fan ON/OFF) (4) Forced Stoppage (5) Demand Current Control (6 to 9)
Output 1	CN16 (1-2)	Operation Signal (1) *
Output 2	CN16 (1-3)	Alarm Signal (2) * Compressor ON Signal (3) Defrosting Signal (4)

*: Setting before Shipment

Все каталоги и инструкции здесь: https://splitsystema48.ru/instrukcii-po-ekspluatacii-kondicionerov.html

In the case that the setting change (only with the mark (*) of the table in the previous page) is required at site, perform the following procedures.

1 Set DSW5-#7 of the outdoor PCB at the “ON” side while the main power to the outdoor unit is being supplied. By setting, function selection mode is available and the following appears on the 7-segment display.

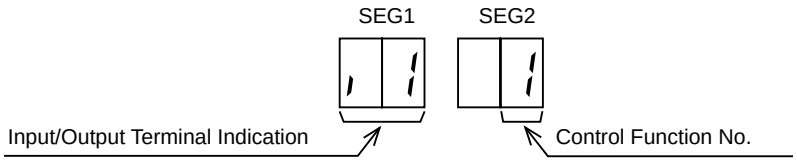

This display indicates that the control function No. 1 (Fixed Heating Operation Mode) is set at input 1.

2 By pressing the push-switches PSW2 and PSW3, input/output terminal indication is changed.
The following shows the display changes when PSW2 and PSW3 are pushed.

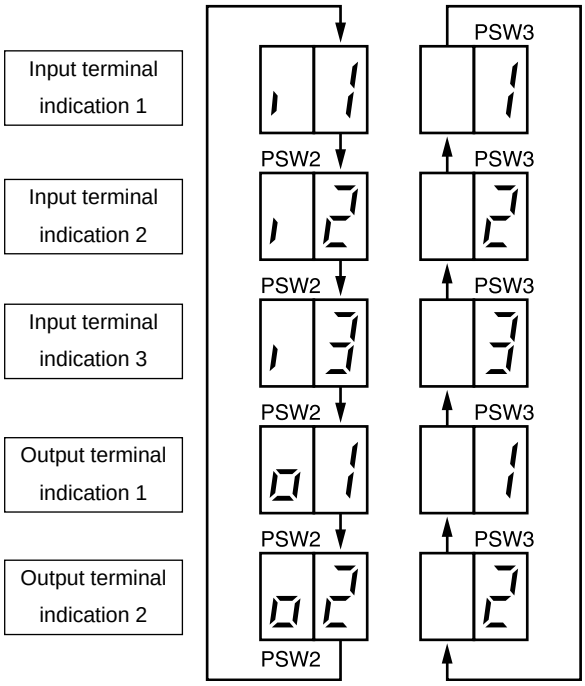

3 After the input/output terminal indication is selected, select your required control function No. by pushing PSW2 or PSW3 while PSW1 is being pushed.

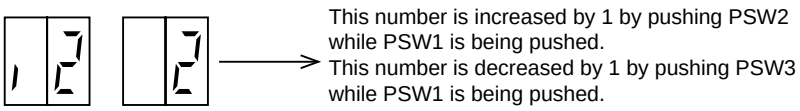

4 After selecting the function No., return No. 7 pin at the “OFF” side on the DSW5. The selected contents are memorized in the outdoor unit printed circuit board and the function selection mode is stopped. The memorized data is maintained even power source lines are disconnected. The connecting details of each function are described, and the required parts are also indicated in the table “Seting of external input and output functions”.

Все каталоги и инструкции здесь: https://splitsystema48.ru/instrukcii-po-ekspluatacii-kondicionerov.html

5.1.2. Description of external input signals

■ **Input 1 – Fixing heating operation mode (Control function No.1),**

■ **Input 2 – Fixing cooling operation mode (Control function No.2)**

In the case that the fixing input terminals of the operation mode on the outdoor unit PCB1 are short-circuited, the operation mode can be fixed at the cooling or heating mode.

Short-circuit between Terminals 1 and 2 of CN17: Fixed Heating Operation Mode

Short-circuit between Terminals 2 and 3 of CN17: Fixed Cooling Operation Mode

During this fixed heating (or cooling) mode, no cooling (or heating) operation is available. The indoor units under the cooling or dry operation (or heating operation) will be changed to the Thermo-OFF condition during this mode, and stoppage code No. “20” is given.

– Setting Example

Fixing Heating Operation at Input 1 (between 1 and 2 pins of CN17)

Fixing Cooling Operation at Input 2 (between 3 and 2 pins of CN17)

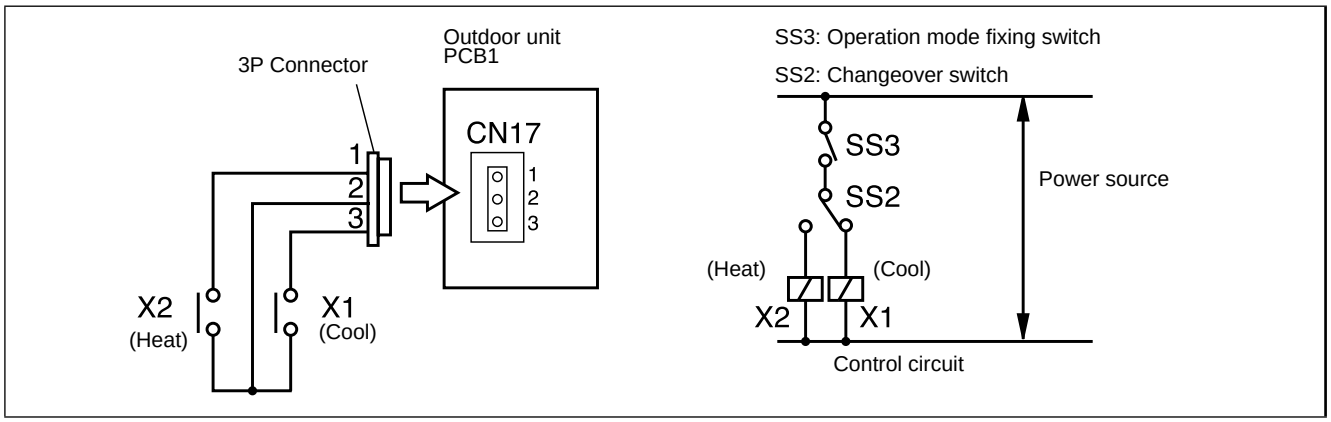

Wiring diagram example of fixing operation mode

■ **Input 3 – Demand stoppage (Control function No.3)**

In the case that the demand input terminals on the outdoor unit PCB1 are short-circuited, compressor(s) is stopped. (In this case, the indoor unit(s) is put under Thermo-OFF condition. Cooling operation: Air-flow setting, Heating operation: Lo setting)

The stoppage code No. “10” is given. By disconnecting the demand switch contact, restarting is available.

– Setting Example

Demand Stoppage at Input 3 (between 1 and 2 pins of CN18)

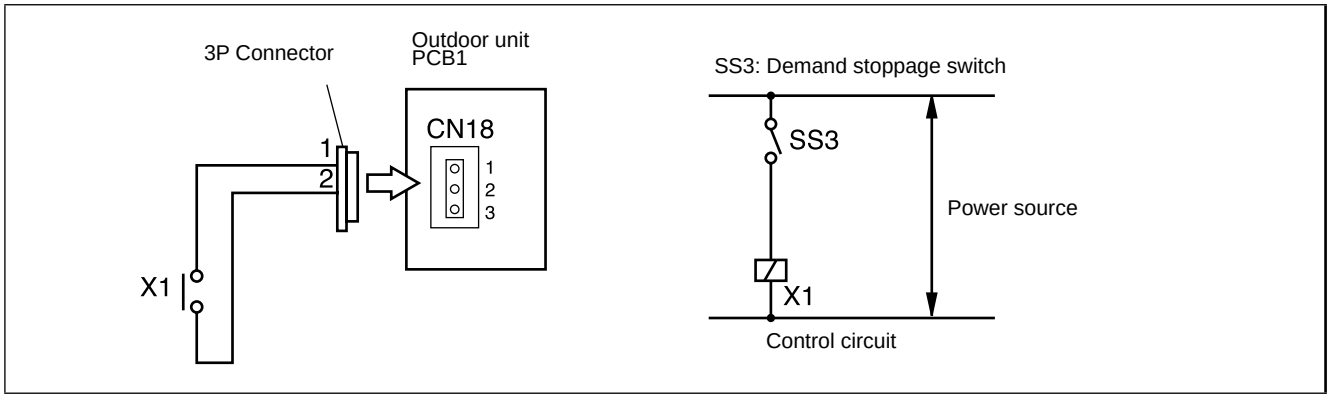

Wiring diagram example of demand stoppage

Все каталоги и инструкции здесь: https://splitsystema48.ru/instrukcii-po-ekspluatacii-kondicionerov.html

■ **Input 3 – Snow sensor (Control function No.4)**

In the case that the input terminals of the snow sensor on the outdoor unit PCB1 are short-circuited during compressor stoppage, all the outdoor fan motors are operated at the full speed. However, if the compressor is called for compressor operation, the fan operation is changed to the normal operation. If the input terminal is opened, the fan(s) is stopped. This function protects the outdoor units from a condition covered with snow.

– Setting Example

Snow Sensor at Input 3 (between 1 and 2 pins of CN18)

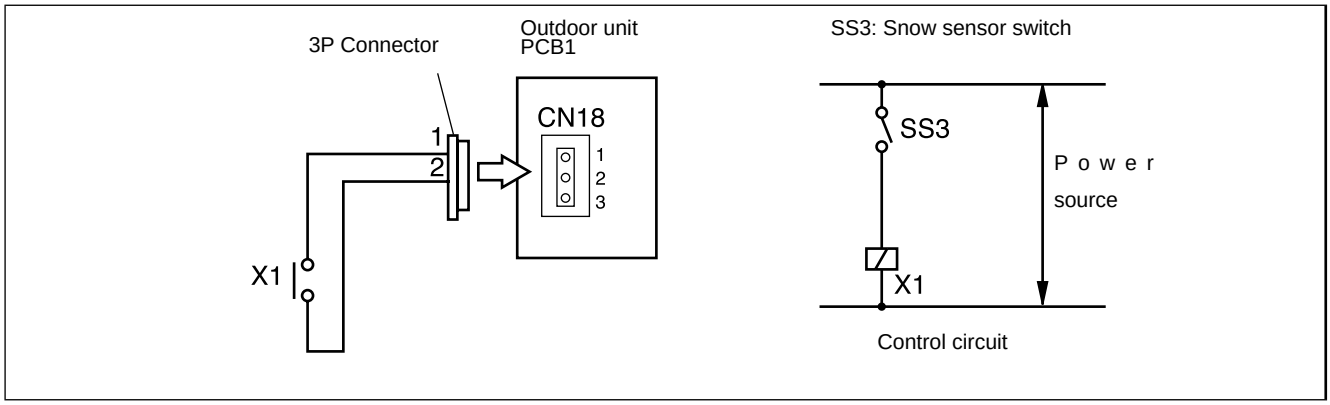

Wiring diagram example of snow sensor

■ **Input 3 – Forced stoppage (Control function No.5)**

The compressor is stopped and the indoor fan motor is stopped when the forced stoppage input terminals on the outdoor unit PCB1 is short-circuited during running. However, the remote control switch display remains at the same mode with the stoppage code No. “10”.

In this case, if the input terminals are opened, operation is resumed.

– Setting Example

Forced Stoppage at Input 3 (between 1 and 2 pins of CN18)

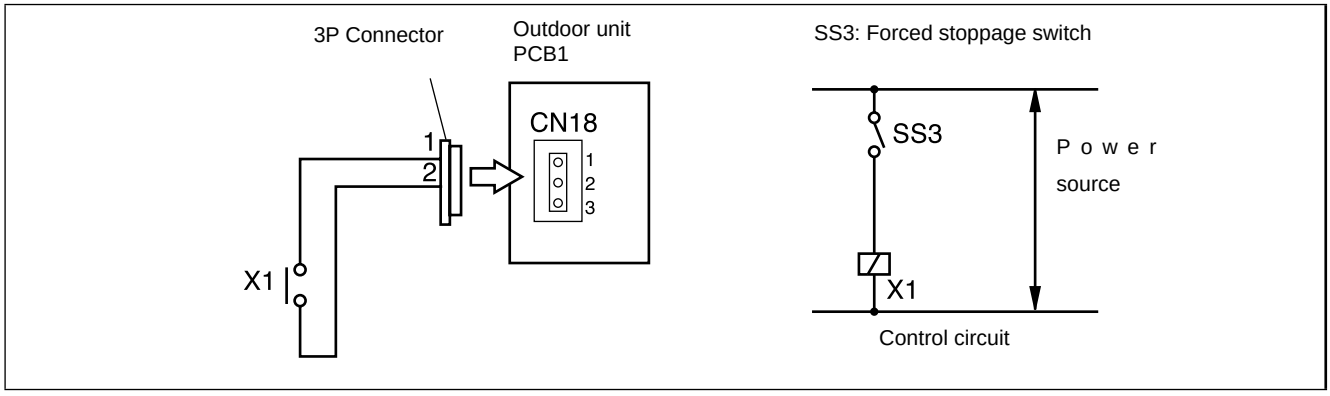

Wiring diagram example of forced stoppage

Все каталоги и инструкции здесь: https://splitsystema48.ru/instrukcii-po-ekspluatacii-kondicionerov.html

■ **Input 3 – Demand current control (Control function No.6 to 9)**

In the case that the demand input terminals on the outdoor unit PCB1 are short-circuited, the compressor frequency is controlled that the maximum limit of the outdoor running current is set 100%, 80%, 70% and 60%.

(The maximum limit of the outdoor unit running current can be selected according to the item “Setting of external input and output functions”.)

If the outdoor unit running current decreases beyond the maximum limit, the indoor unit is put under thermo-OFF condition. The stoppage code No. “10” is given. When the input terminal is opened during the demand current control, its control is reset.

– Setting Example

Demand Current Control at Input 3 (between 1 and 2 pins of CN18)

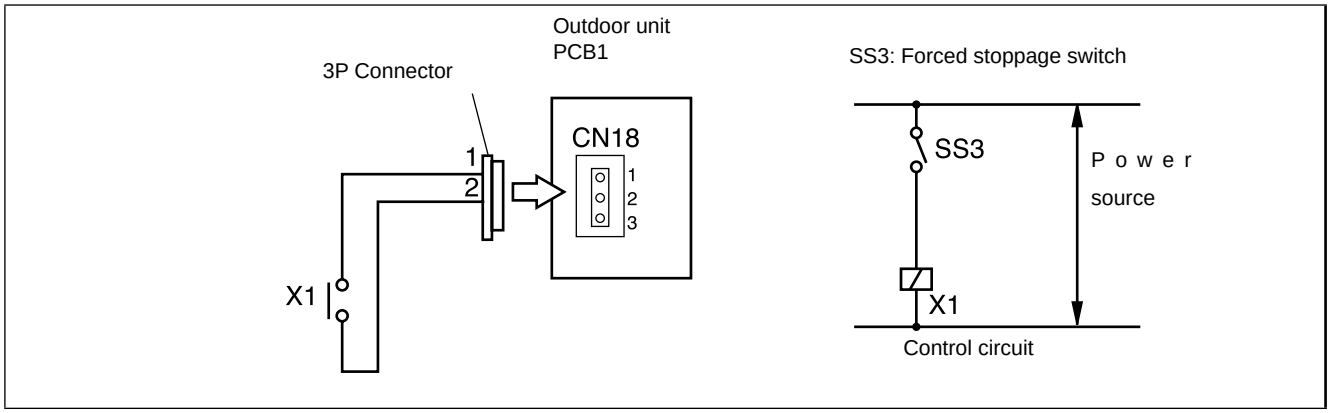

Wiring diagram example of demand current control

Table 5.1 Specifications of required main parts

Parts		Specifications	Remarks
Auxiliary Relay (X1, X2)		Mini-Power Relay, MY1F (or 2F) made by OMRON	220V/240V
Changeover Switch (SS2, SS3)		Manual Switch	220V/240V
3 Pin Connector Cord		PCC-1A (Connected to JST Connector, XARP-3)	Five Cords with Connectors as One Set
Cord	Low Volt.	0.3mm^2	lower than 24V
(Inside of Unit)	220/240V	0.5 to 0.75mm^2	
Cord	Low Volt.	0.5 to 0.75mm^2	lower than 24V
(Outside of Unit)	220/240V	2mm^2	

NOTES

1. Make the wire to the terminals as short as possible.

2. Do not run the wires along high voltage cable. (crossing is applicable.)

If necessary to run wires along high voltage cable, insert the low voltage cable(s) into metal tube and ground it at one end. If sealed wires are used at the low voltage wire side, ground it at one end of shield wires. The maximum length should be 70m.

Все каталоги и инструкции здесь: https://splitsystema48.ru/instrukcii-po-ekspluatacii-kondicionerov.html

5.1.3. Description of external output signals

The following signals can be picked up from the outdoor PCB.

Refer to the table 5.2 for the required main parts.

■ **Output 1 – Operating signal (Control function No.1)**
Auxiliary relay contacting (RYa) is closed during the operation. Operating signal will be sent when the indoor units are operating. (Even when one (1) indoor unit is operating, the signal will be sent.) This function can be used for circulator or humidifier operation.

– Setting Example

Operation Signal at Output 1 (between 1 and 2 pins of CN16)

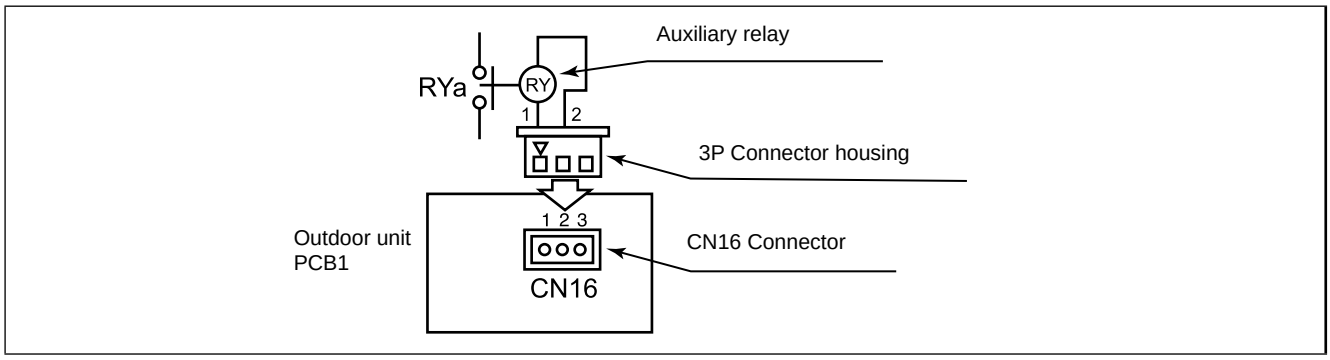

Wiring diagram example of operation signal

■ **Output 2 – Alarm signal (Control function No.2)**
Auxiliary relay contacting (RYa) is closed when the alarm occurs. Alarm signal will be sent when the alarm occurs from the indoor units. (The signal will be sent even when the alarm occurs from one (1) indoor unit.)

– Setting Example

Alarm Signal at Output 2 (between 1 and 3 pins of CN16)

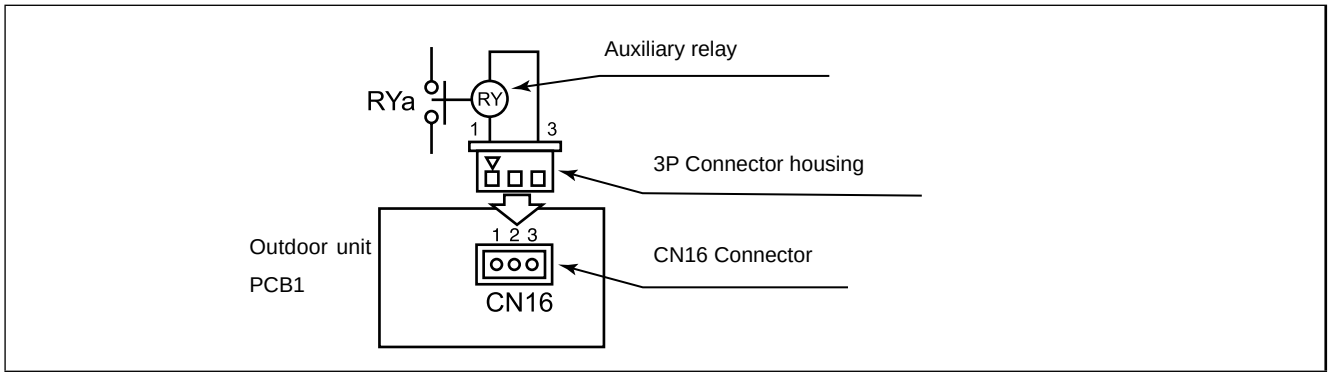

Wiring diagram example of alarm signal

Все каталоги и инструкции здесь: https://splitsystema48.ru/instrukcii-po-ekspluatacii-kondicionerov.html

■ **Output 2 – Compressor ON signal (Control function No.3)**
Auxiliary relay contacting (RYa) is closed during the compressor operation.

– Setting Example

Compressor ON Signal at Output 2 (between 1 and 3 pins of CN16)

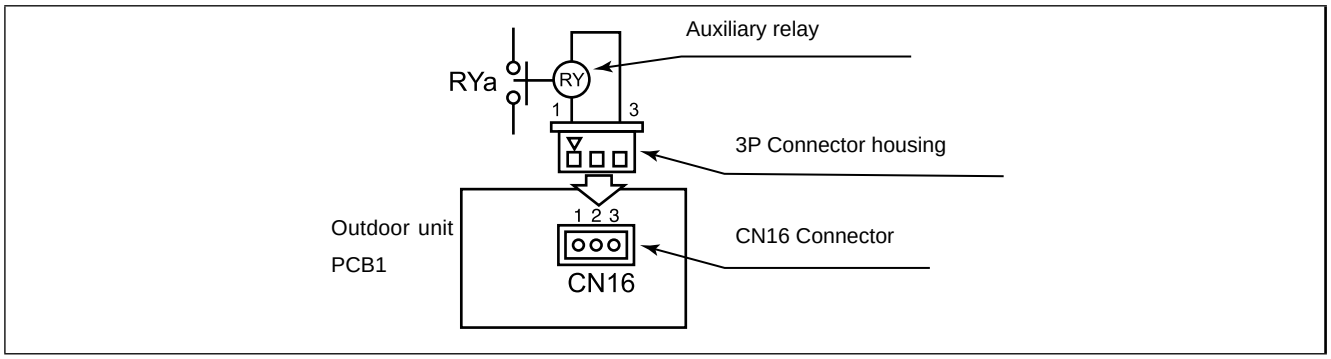

Wiring diagram example of compressor ON signal

■ **Output 2 – Defrosting signal (Control function No.4)**
Auxiliary relay contacting (RYa) is closed during the defrosting.

– Setting Example

Defrosting Stoppage at Output 2 (between 1 and 3 pins of CN16)

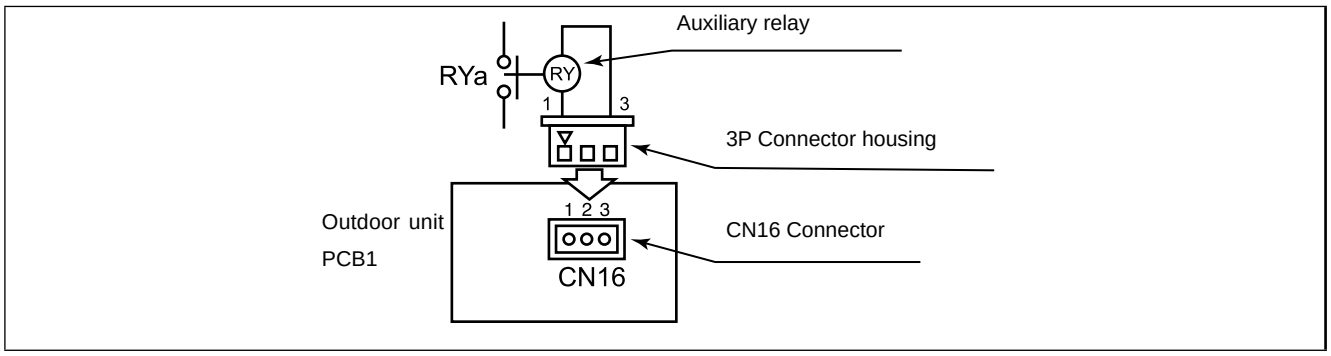

Wiring diagram example of defrosting signal

Table 5.2 Specifications of required main parts

Parts	Specifications
Auxiliary Relay *	High-Power Relay, LY2F DC12V made by OMRON

* Do not use the relay with diode built-in.
* Refer to the table 5.1 for the connector parts.

Все каталоги и инструкции здесь: https://splitsystema48.ru/instrukcii-po-ekspluatacii-kondicionerov.html

5.1.4. Optional functions

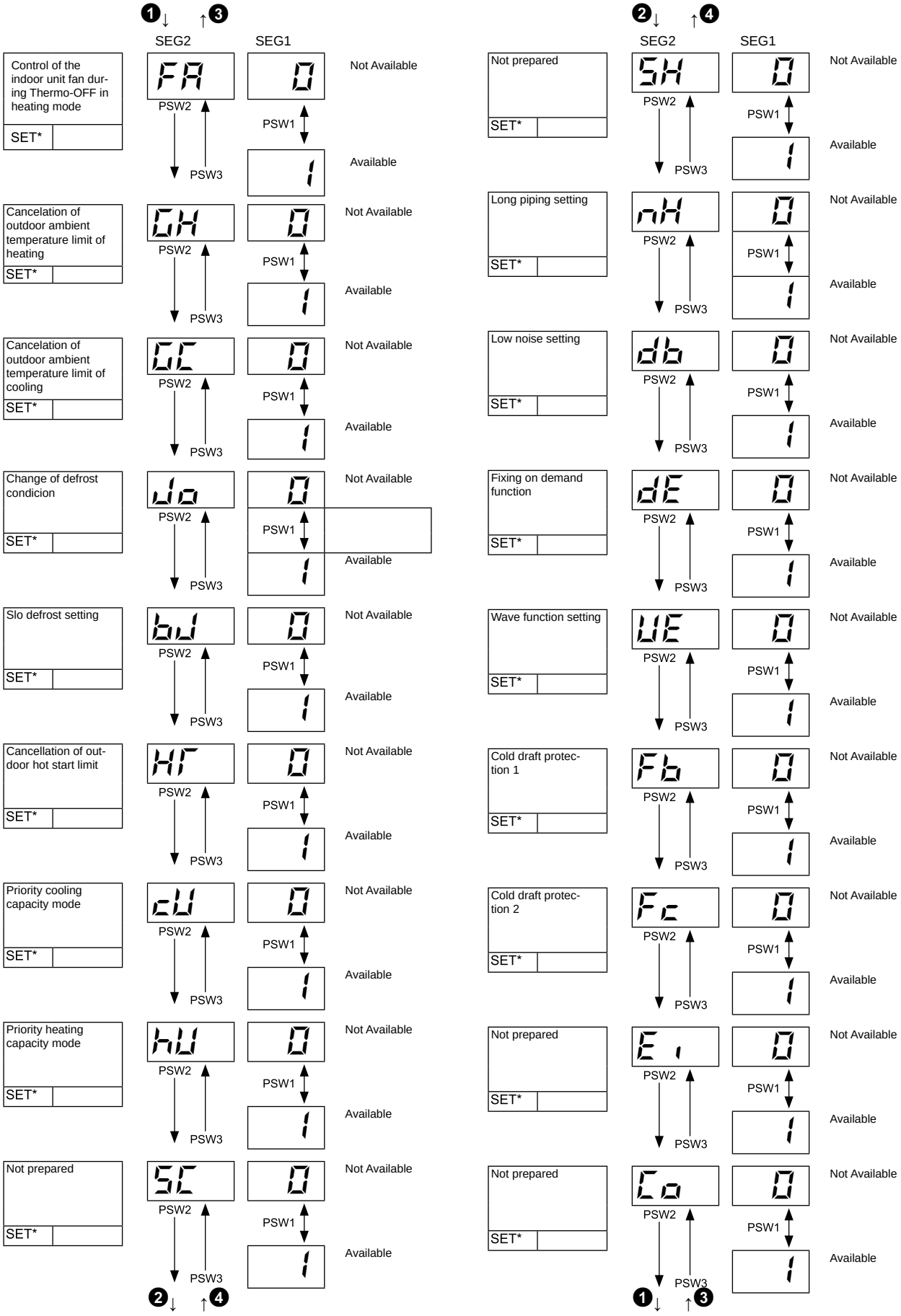

Все каталоги и инструкции здесь: https://splitsystema48.ru/instrukcii-po-ekspluatacii-kondicionerov.html

Circulator function at heating thermo-OFF

Press “RSW1” and select the setting condition “1” at the circulator function at heating thermo-OFF “ FA ”.

In case that the fan speed is changed to “LOW” at heating Thermo-OFF, there is a case that the room air temperature is too high at heating Thermo-OFF.

In this case, the circulator function at heating thermo-OFF is recommended, and its function explains below.

The indoor fan operates for 2 minutes and stops for 6 minutes as a cycle when the activation conditions are satisfied.

Operation
When the indoor unit is at thermo-OFF during the heating operation, the indoor fan operates and stops for 6 minutes in 2 minute cycles

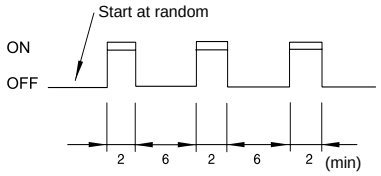

NOTE
When the indoor fan is stopped by another control, it is not available to operate indoor fans.

Night-Shift (Low noise)

Press “PSW1” and select the setting condition “1” at the night shift (low noise) “n 1“. Then, this function can be set.

The outdoor fan operation is controlled by fan controller as shown below.

The night shift operation shall be applied in case that the cooling capacity has the margin to be allowed for the capacity decrease and the low sound operation is required especially in the nighttime.

Outdoor Fan

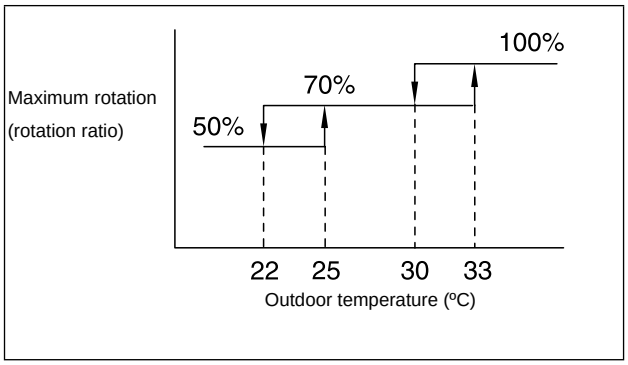

NOTE
The maximum rotation is always 100% (rotation ratio) for the standard unit. (No limitation of the outdoor temperature)

Все каталоги и инструкции здесь: https://splitsystema48.ru/instrukcii-po-ekspluatacii-kondicionerov.html

■ Frequency range (Cooling operation)

	Outdoor Unit Capacity (HP)	Minimum Frequency (Hz)	Maximum Frequency (Hz)	Conditions		Outdoor Unit Capacity (HP)	Minimum Frequency (Hz)	Maximum Frequency (Hz)	Conditions
When night shift is not set ni=0	8	15	68	Except for the conditions on the right	When night shift is set ni=1	8	15	60	(1) ni=1 (2) Outdoor fan: Below 70%
	10		85			10		60	
	12		100			12		60	
	14		119			14		90	
	16		136			16		100	
	18		153			18		105	
	20		170			20		110	
	22		187			22		122	
	24		204			24		127	
	26		221			26		132	
	28		238			28		137	
	30		255			30		175	
	32		272			32		187	
	34		289			34		199	
	36		304			36		214	
	38		323			38		244	
	40		340			40		254	
	42		357			42		264	
	44		374			44		271	
	46		391			46		281	
	48		408			48		291	

Converted frequency of constant speed compressor

Outdoor unit capacity (HP)	Power supply frequency (Hz)			
	MC2	MC3	MC4	MC5
14, 16	50	-	-	-
18, 20	50	50	-	-
22, 24	50	77	-	-
26, 28	77	77	-	-
30~36	77	77	50	-
38~42	77	77	50	77
44~48	77	77	77	77

	Note
	The maximum frequency for the 8 to 48HP outdoor unit is indicated as; *Inverter frequency + converted frequency of constant speed compressor.*

5

Все каталоги и инструкции здесь: https://splitsystema48.ru/instrukcii-po-ekspluatacii-kondicionerov.html

Cancellation of outdoor ambient temperature limit of heating

Press “PSW1” and select the setting condition “1” at the cancellation of outdoor ambient temp. limit of heating “ 0H ”. Then, this function can be set.

The heating operation is continued under a high outdoor temperature.

Operation in heating mode	
The factory-set limitation of the range of permissible outdoor temperature in the heating process, which is shown in the right figure, is cancelled.	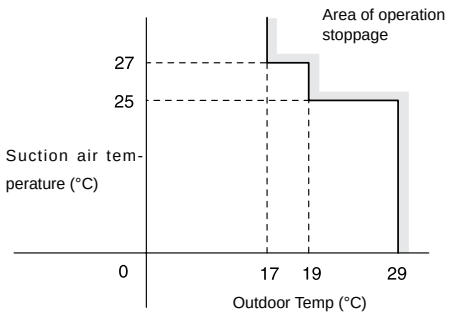

	Note
The operation may be OFF due to high outdoor temperature protection control, since protection control is not cancelled.	

Cancellation of outdoor ambient temperature limit of cooling

Press “PSW1” and select the setting condition “1” at the cancellation of outdoor ambient temp. limit of cooling “0C”. Then, this function can be set.

The cooling operation is continued under a low temperature.

Operation in cooling mode	
The factory-set limitation of the range of permissible outdoor temperature in the heating process, which is shown in the right figure, is cancelled.	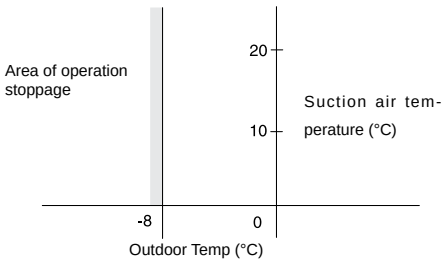

	Note
The operation may be OFF due to low outdoor temperature protection control since protection control is not cancelled.	

Все каталоги и инструкции здесь: https://splitsystema48.ru/instrukcii-po-ekspluatacii-kondicionerov.html

Change of defrost condition

Press “PSW1” and select the setting condition “1” at the change of defrost condition “Jo”.

Setting condition	Standard Specifications	Cold area specification
	When change of defrost condition is NOT set	When change of defrost condition is set
Temperature conditions under defrosting operation	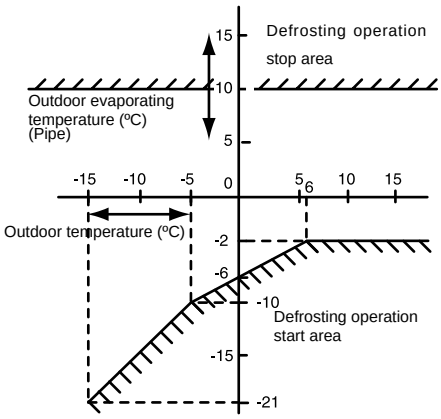	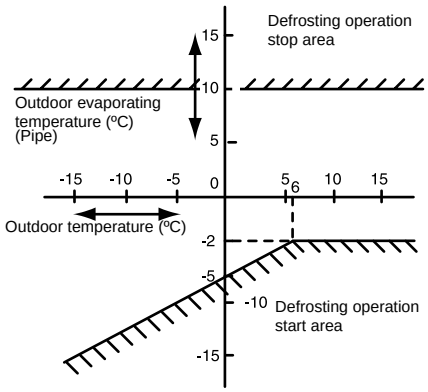

SLo defrost setting

Press “PSW1” and select the setting condition “1” at the slow defrost setting “bJ“.

Indoor fan operation is stopped during the defrost operation. However, this function can be operated the indoor fan at low speed during the defrosting operation.

5

Long piping setting

Press “PSW1” and select the setting condition “1” at the long piping setting “nH”.

If cooling capacity or heating capacity is not enough under the long-distance piping condition, this function can be set the target compressor frequency higher than normal target value.

Low noise setting

Press “PSW1” and select the setting condition “1”, so the low noise setting “db” can be set.

The outdoor fan maximum rotation is set lower than normal setting regardless of outdoor temperature.

However, continuous operation can not be operated under the condition below.

a) Outdoor temperature is over 40 ºC.

b) Total combination horsepower is over 100%.

Все каталоги и инструкции здесь: https://splitsystema48.ru/instrukcii-po-ekspluatacii-kondicionerov.html

■ **Fixing of demand function**

Press “PSW1” and select the setting condition “1”, so that the fixing of demand function “dE” can be set.

However, it is not necessary to short-circuit the demand input terminals on the outdoor unit PCB. (Refer to the item “Input 3 – Demand Current Control”)

The table below is the limit of the running current for this function.

Control Function No. *	Demand Running Current Control
1 to 5	100%
6	60%
7	70%
8	80%
9	100%

* This function can be activated when demand function is selected at one of the input terminal indications i1, i2 and i3.

In case that multiple demand functions are set at the input terminal indications i1, i2 and i3, the demand running current is selected as below.

6 > 7 > 8 > 9
|
(Control Function No.)

* Demand Control
Adopting self-demand function which drastically decreases power consumption has largely improved energy-saving.

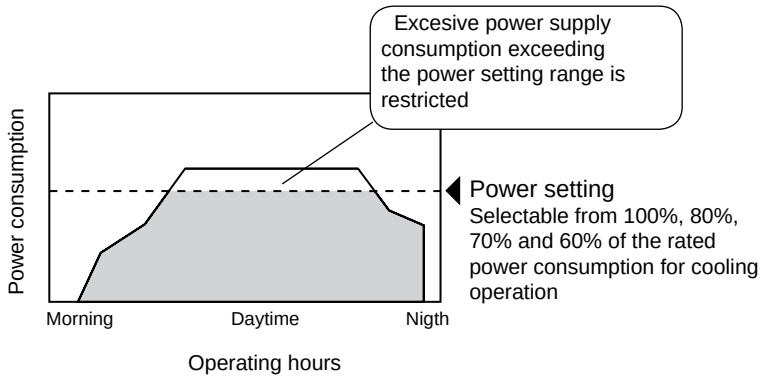

Все каталоги и инструкции здесь: https://splitsystema48.ru/instrukcii-po-ekspluatacii-kondicionerov.html

Wave function setting

Press “PSW1” and select the setting condition “1”, so that the wave function setting “UE”.

While this function is activated, the maximum limit of running current is changed from 60% to 100% as shown in the figure.

* Wave function cannot be available when the setting condition “1” at the fixing of demand function “dE” is selected and the demand current control from the external input signal is set.

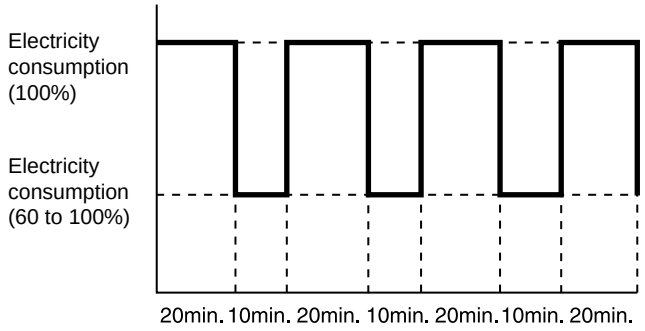

* Wave function can be activated when demand function is selected at one of the input terminal indications i1, i2 and i3.

The minimum limit of running current control is according to the set value of the demand function.

If demand function is not set at the input terminal indication, this function can not be activated. **n Cold draft protection 1**

Press PSW1 and select the setting condition “1” at the cold draft protection 1 “Fb”, so the cold draft protection can be set. When the minimum Indoor unit discharge air temperature falls down to 12 ºC and below at cooling operation, outdoor fan stops and compressor frequency forcibly decreases to prevent a drop in discharge air temperature.

5

Cold draft protection 2

Press PSW1 and select the setting condition “1” at the cold draft protection 2 “Fc” , so this function can be set. When Indoor unit minimum discharge air temperature falls down to 10 ºC and below at cooling operation, the compressor stops. In this case, stoppage code number “28” is given.

Все каталоги и инструкции здесь: https://splitsystema48.ru/instrukcii-po-ekspluatacii-kondicionerov.html

Все каталоги и инструкции здесь: https://splitsystema48.ru/instrukcii-po-ekspluatacii-kondicionerov.html

6. Test run

Contents

6. Test run ____ 83
6.1. Checking procedure before the test run ____ 84
6.2. Test run procedure from the outdoor unit side ____ 86
6.3. Check list ____ 87
6.4. Judgement systems for refrigerant amount ____ 90
6.4.1. Automatic judgement system for refrigerant amount ____ 90
6.4.2. Simple judgement system for refrigerant amount ____ 91

Все каталоги и инструкции здесь: https://splitsystema48.ru/instrukcii-po-ekspluatacii-kondicionerov.html

6.1. Checking procedure before the test run

Test run should be performed according to the Table 6.2. And use the Table 6.1 for recording test run .

WARNING

■ **Do not operate the system until all the check points have been cleared .**

A) Check to ensure that the refrigerant piping and transmission between outdoor unit and indoor units are connected to the same refrigerant cycle. If not, it will cause an abnormal operation and a serious accident .

B) Check to ensure that the electrical resistance is more than 1 megohm, by measuring the resistance between ground and the terminal of the electrical parts. If not, do not operate the system until the electrical leakage is found and repaired .

C) Check to ensure that the stop valves of the outdoor unit are fully opened, and then start the system .

D) Check to ensure that the switch on the main power source has been ON for more than 12 hours, to warm the compressor oil by the oil heater .

E) Check that the refrigerant piping and the electrical wiring conform to the same system, and check that the dip switch setting of the refrigerant cycle No. (DSW1 & RSW1 [O.U.], DSW5 & RSW2 [I.U.]) and the unit number (RSW) for the indoor units apply to the system .

Confirm that the dip switch setting on the printed circuit board of the indoor units and the outdoor units are correct .

Especially, pay attention to the setting of lift between indoor units and outdoor unit, the refrigerant No. and the end terminal resistance. Refer to the chapter “6. Electrical Wiring” .

F) Check to ensure that the electrical resistance is more than 1 megohm, by measuring the resistance between ground and the terminal of the electrical parts. If not, do not operate the system until the electrical leakage is found and repaired. Do not impress the voltage on the terminals for transmission 1 and 2 .

G) Check to ensure that each wire, L1, L2, L3 and N (R, S and T) is correctly connected at the power source .

If incorrectly connected, the unit will not operate and the remote control switch will indicate the alarm code “05”. In this case, check and change the phase of the power source according to the attached seat on the reverse side of the service cover .

H) Check to ensure that switch on the main power source has been ON for more than 12 hours, to warm the compressor oil by the oil heater .

■ **FSN2 series outdoor units does not operate within 4 hours after power supply (Stoppage Code d1-22) .**

In case of operating within 4 hours, release the protection control as follows:

1. Supply power to the outdoor unit and indoor units .
2. Wait for 30 seconds .
3. Push PSW1 on PCB more than 3 seconds .

■ **Pay attention to the following items while the system is running .**

A) Do not touch any of the parts by hand at the discharge gas side, since the compressor chamber and the pipes at the discharge side are heated higher than 90°C .

B) DO NOT PUSH THE BUTTON OF THE MAGNETIC SWITCH(ES). It will cause a serious accident .

■ **Do not touch any electrical components for at least 3 minutes after turning OFF the main switch .**

■ **Check that the refrigerant piping setting and electrical wiring setting are for the same system, by operating the indoor unit one by**

Все каталоги и инструкции здесь: https://splitsystema48.ru/instrukcii-po-ekspluatacii-kondicionerov.html

CAUTION

■ Caution for Insulation Resistance

If total unit insulation resistance is lower than 1 megohm, the compressor insulation resistance may be low due to retained refrigerant in the compressor. This may occur if the unit has not been used for long periods .

1. Disconnect the cables to the compressor and measure the insulation resistance of the compressor itself. If the resistance value is over 1 megohm, then insulation failure has occurred of other electrical parts .
2. If the insulation resistance is less than 1 megohm, disconnect the compressor cable from the inverter PCB. Then, turn on the main power to apply current to the crankcase heater .

   After applying current for more than 3 hours, measure insulation resistance again. (Depending on the air conditions, pipe length or refrigerant conditions, it may be necessary to apply the current for a longer period of time.) Check the insulation resistance and reconnect the compressor .

   If the leakage breaker is activated, check the recommended size shown in Table 6.1 .

NOTES

1. Confirm that field-supplied electrical components (main switch fuse, fuse-free breaker, earth leakage breakers, wires, conduit connectors and wire terminals) have been properly selected according to the electrical data given in this Technical Catalog of the unit and ensure that the components comply with national and local codes .
2. Use shielded wires (≥0.75mm2) for field wiring to protect electrically noise obstacle. (Total length of shielded wire shall be less then 1000m, and size of shielded wire shall comply with local codes.)
3. Check to ensure that the terminal for power source wiring (terminals “L1” to “L1” and “N” to “N” of each terminal board: AC 380-415V, terminals “R” to “L1” and “S” to “L2” of each terminal board: AC 220V) .

   If not, some component will be damaged .

Все каталоги и инструкции здесь: https://splitsystema48.ru/instrukcii-po-ekspluatacii-kondicionerov.html

6.2. Test run procedure from the outdoor unit side

The test run procedure from the outdoor unit side is shown below. You can set this DIP switch while the power source is ON

Setting of Dip Switch (before shipment)

DSW4		
ON 1 2 3 4 5 6	1	Test run
	2	COOL/HEAT setting (ON: Heating operation)
	3	OFF (mixed)
	4	Manual compressor OFF
	5	Number of indoor units is more than 16 OFF (Fixed)
	6	Compressor exchange operation

Printed circuit board of the outdoor unit (PCB1)

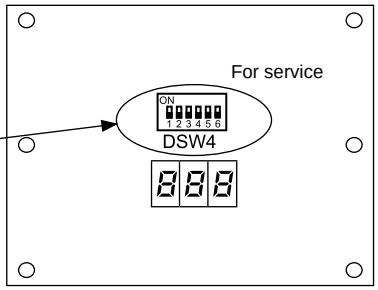

Warning:

- *Do not touch any other electrical components while you are setting the switches on the PCB.*
- *Do not attach or detach the service access panel when the power source for the outdoor unit is ON and the outdoor unit is operating.*
- *Set all the DIP switches of DSW4 to OFF after completing the test run.*

	Dip switch seting	Operation	Remarks
Test run	1. Setting operation mode Cooling: Set DSW4-2 OFF ON 1 2 3 4 5 6 Heating: SET DSW4-2 ON ON 1 2 3 4 5 6 Starting the test run: Set DSW4-1 at ON. The operation starts after 20 s. In case of heating process, leave DSW4-2 at ON ON 1 2 3 4 5 6	– The indoor unit automatically starts to operate when the test run of the outdoor unit is set. – You can perform the ON/OFF operation from the remote control switch or the DSW4-1 of the outdoor unit. – Continuous operation during 2 hours is performed without the Thermo-OFF condition.	– Make sure that the indoor units start to operate in accord with the test run of the outdoor unit. – If you start the test run from the outdoor unit and you stop the test run from the remote control switch, the test run function of the remote control switch is cancelled. However, the test run function of the outdoor unit is not cancelled. – Check to ensure that he DSW4-1 of the outdoor unit PCB is turned OFF. – If the more than one indoor unit is connected with one remote control switch, all the units start the test run at the same time. Therefore, turn OFF the power source so that the indoor units do not perform the test run. If this is the case, the TEST RUN indication of the remote control switch may flicker. This is not abnormal. Outdoor unit Test run Power OFF – The setting of DSW4 is not required for the test run from the remote control switch.
Manual compressor OFF	Setting the compressor manually OFF: Set DSW4-4 at ON ON 1 2 3 4 5 6 ON: Set DSW4-4 at OFF ON 1 2 3 4 5 6	– When DSW4-4 is ON during the compressor operation, the compressor stops operating immediately and the indoor unit is under the Thermo-OFF condition. – When DSW4-4 is OFF, the compressor starts to operate after the cancellation of the 3-minute guard.	– Do not turn ON and OFF the compressor frequently
Manual defrost	– Manual defrost operation starts. Press the PSW1 for more than three seconds during the heating process. The defrost operation starts after two minutes. This function is available once the heating process has been running for five minutes. – Manual defrost operation finishes. The defrost operation automatically finishes and the heating process starts.	– The defrost operation is available regardless of the frosting conditions and the total time of the heating process. – The defrost operation is not performed when the temperature of the outdoor heat exchanger is higher than 10°C, the high pressure is higher than 2.0MPa or under the Thermo-OFF condition.	– Do not repeat the defrost operation frequently. – When the PSW1 accepts the manual defrost operation, the remaining time before starting the defrost operation is displayed at the 7-segment display on the PCB. d 2 0 Remaining time (every 4 seconds)

Все каталоги и инструкции здесь: https://splitsystema48.ru/instrukcii-po-ekspluatacii-kondicionerov.html

6.3. Check list

■ **Check list on test run**

Client:			Installer:			Date:		
Outdoor unit model:			Outdoor unit serial No.:			Checker:		
Indoor unit model:								
Indoor unit serial No.								

Piping lenght [m]	
Additional refrigerant charge [kg]	

1. General

No.	Check item	Result
1	Was the DIP switch DSW6 for the piping length in the outdoor unit set?	
2	Was the DIP switch DSW3 for the piping lift in the outdoor unit set?	
3	Are the power supply wires of the transmission cable making contacts on the piping?	
4	Was a ground wire connected?	
5	Is there any short circuit?	
6	Is there any voltage malfunction among the different phases (L1-L2, L2-L3, L3-L1, L1-N)?	

2. Refrigerant cycle

a. Cooling/heating process

No.	Check item	Result
1	Operate all the indoor units. (TEST RUN mode).	
2	Operate all the indoor units at the “HIGH” speed.	
3	If you turn ON and OFF the constant speed compressor repeatedly, stop one indoor unit (an indoor unit with a small capacity).	

b. Sampling data (cooling/heating process: if the indoor temperature is between 21°C and 30°C)

No.	Check item	Result
1	After operating for more than 20 minutes.	
2	Check Pd. and Td. Is TdSH 15 to 45 degrees?	
3	Is Ps 0.2 to 1.1?	
4	Is Pd 1.0 to 3.5? (If the outdoor temperature is high, the Pd. becomes high.)	

Все каталоги и инструкции здесь: https://splitsystema48.ru/instrukcii-po-ekspluatacii-kondicionerov.html

3. Check item after sampling data

a. Cooling process (if the outdoor temperature is higher than 15 ºC)

No.	Check item	Standard	Causes	Result
1	Is H1 (compressor frequency) + (CC (number of running compressors) -1) X (❄) abnormally low or high? (It is applicable when the inlet air temperature is three degrees higher than the setting temperature).	Running horsepower of the indoor units X 8Hz	– Low: excessive refrigerant; – High: insufficient refrigerant; – DSW for capacity of indoor units: Incorrect setting.	
2	Is the fan actually running when Fo (airflow rate of fan) is other than "0" (5~32) or “16” (36~48)?	–	Failure of the fan motor; Failure of the PCB; Failure of the condenser.	
3	Is the Td1 higher than Td2-Td5 when only the compressor No.1 is running (when CC (number of running compressors) is ⌈1⌋)?	–	Incorrect connection or incorrect mounting of the Td thermistor.	
4	Is the total of iE (indoor expansion valves opening) abnormally low or high?	Total % of iE: horsepower of the outdoor unit X (0.7 to 1.5).	Low: excessive refrigerant; High: insufficient refrigerant, excessive pipe resistance.	
5	Is TL (liquid pipe temperature of the heat exchanger of the indoor unit) lower than Ti (air inlet temperature of the indoor unit)?	It is normal when TL-Ti < -5 deg.	Failure of the TL thermistor; Fully closed I.U. expansion valve; Short circuit.	
6	Is TG (gas pipe temperature of the heat exchanger of the indoor unit) lower than Ti (air inlet temperature of the indoor unit.)?	It is normal when TG-Ti < -5 deg.	Failure of the TG thermistor; Fully closed expansion valve or slightly open I.U. expansion valve; Short circuit.	
7	Is there any excessive difference among indoor units at SH(TG-TL) of the heat exchanger of the indoor units? (It is applicable when the inlet air temperature is three degrees higher than the setting temperature.)	It is normal if the difference among units is within 3 - 7 deg. lower than other units.	Failure of the TL/TG thermistor; Fully open expansion valve, slightly open expansion valve or fully closed expansion valve.	
8	Is there any excessive different among indoor units at SH (TG-TL) of the heat exchanger of the indoor units and is iE lower than ⌈7⌋? (It is applicable when intake air temp. is 3 deg. higher than setting temp.	It is normal if SH is within 3 deg. lower than other units.	Expansion valve locked in fully open position; The refrigerant cycle number does not match; Mismatched between wiring and piping.	
9	Is there any indoor unit with SH (TG-TL) excessively lower than the value of other units, under the condition of IE (indoor unit expansion valve) ⌈100⌋?	It is normal if SH is within 3 deg. higher than other units.	Expansion valve locked in slightly open position or closed expansion valve; The refrigerant cycle number does not match; Mismatched between wiring and piping.	
10	Is the temperature difference between I.U.* more than 7 deg.? * The temperature difference between I.U. means the following; b3 (Discharge Air Temp.) - b2 (Intake Air Temp.) indicated on the remote control switch by check mode.	–	–	

Все каталоги и инструкции здесь: https://splitsystema48.ru/instrukcii-po-ekspluatacii-kondicionerov.html

b. Heating process (if the outdoor temperature is higher than 0 ºC)

No.	Check item	Standard	Causes	Result
1	Is oE1,oE2 (outdoor unit expansion valves opening) abnormally low or high when TdSH is 15 to 45 degrees? (The higher the operating frequency, the higher the oE1).	Total of oE1, oE2: total frequency of compressor x 0.2 to 0.6	Low: excessive refrigerant; High: insufficient refrigerant.	
2	Is Pd⌈1.6⌋ to ⌈3.5⌋? (Pd is high when the indoor temperature is high).		Low: leakage of the SVA (solenoid valve); High: excessive gas pipe resistance.	
3	Is H1 (compressor frequency) + (CC (number of running compressors) -1) (❄) abnormally low or high? (The lower the room temperature and the outdoor temperature, the higher the above value).		Low: excessive refrigerant; High: insufficient refrigerant, excessive pipe resistance.	
4	Is Ps⌈0.2⌋ to ⌈1.1⌋? (Only under the condition that the solenoid valve (SVB) is OFF).		Low: short circuit of the outdoor unit; Low/High: failure of the following components: outdoor fan, motor, fan module, DC remote control or outdoor air sensor.	
5	Is the temperature difference among the indoor units* more than 15 degrees when iE (indoor unit expansion valve) is 100? *The temperature difference among the indoor units means the following: b3 (Discharge Gas Temperature) - b2 (air inlet temperature) that is displayed on the remote control switch by means of the check mode. However, this is applicable only when b2 (Air Inlet Temperature) - b1 (setting temperature) is higher than three degrees.		Failure of components such as the PCB, the wiring, the coil, the valve; Excessive pipe resistance; Failure of the thermistor for the discharge air temperature.	

6

NOTES:

1. *The symbol with an underline indicates a check item. The mark⌈⌋indicates the checking data.*
2. *Regarding the mark (❖) (converted frequency of constant compressor), you should apply the following values.*

For FSN2

Mark (❖)				
Outdoor Unit Model	MC2	MC3	MC4	MC5
RAS-14 and 16FSN2	50	–	–	–
RAS-18 and 20FSN2	50	50	–	–
RAS-22 and 24FSN2	50	77	–	–
RAS-26 and 28FSN2	77	77	–	–
RAS-30 to 36FSN2	77	77	50	–
RAS-38 to 42FSN2	77	77	50	77
RAS-44 to 48FSN2	77	77	77	77

Все каталоги и инструкции здесь: https://splitsystema48.ru/instrukcii-po-ekspluatacii-kondicionerov.html

6.4. Judgement systems for refrigerant amount

6.4.1. Automatic judgement system for refrigerant amount

This function is available under the following conditions:

– Total piping length is 300 m or more.
– The indoor and outdoor air temperature is within the applicable range as shown in the figure:

Before performing this function, charge the additional refrigerant according to the total piping length. However, this function can not be utilized for judgement of excessive refrigerant and combined the indoor unit of 8HP or more.

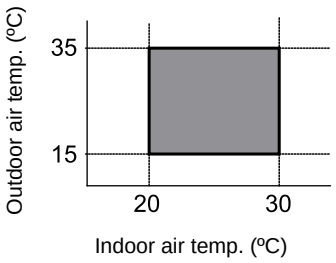

◆ **Procedure of judgement for refrigerant charge amount**

1. Check to ensure that all of indoor units is turned OFF.
2. Turn ON No. 6 pin of DSW5 on the outdoor PCB (PWB1). When starting judgement, all of indoor units are operated at cooling mode.

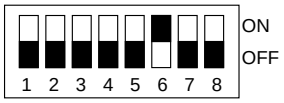

NOTES:

This function is automatically judged at the cooling mode. At heating mode, this function is not available. Check to ensure that the indoor and outdoor air temperature is within the applicable range.

◆ **Contents of judgement for refrigerant charge amount**

During the judgement operation, the 7-segment display is changed according to the operating condition.

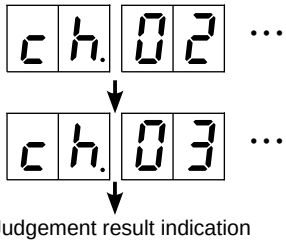

Checking Refrigerant Cycle Condition

* It takes 10 minutes or more from starting judgement.

During Judgement Refrigerant Charge Amount

* It takes 10 minutes or more from starting judgement. In case of not indicated the judgement result, it may be impossible to judge because that the refrigerant cycle is varied widely. (Refer to the item (3) -2.- f).)

Result	7-segment Indication	Remarks
Sufficient Refrigerant	End	The refrigerant amount is sufficient. However, check to ensure that it is possible to indicate the same judgement in case of the excessive refrigerant.
Insufficient Refrigerant	ch. Lo	The refrigerant amount is insufficient. After charged measure of 3% or less of addtional refrigerant, perform the refrigerant amount judgement again.

NOTES:

1. This function is utilized in case of insufficient refrigerant only, not utilized in case of the excessive refrigerant and the total piping length 300m or more.

2. During the refrigerant amount judgement, the 7-segment display ch. is flickered and the judgement operation is forced termination. The causes of forced termination are following. After resolved the cause of forced termination, restart the refrigerant amount judgement again.

a) When turned ON the power supply, the automatic address setting operation is performed at the same time. During this time, No. 6 pin of DSW5 is turned ON.
b) Before turned ON No. 6 pin of DSW5, other indoor unit has been operated.
c) The indoor cooling load is decreased and the total of indoor units capacity is 30% or less of the outdoor unit capacity.

Все каталоги и инструкции здесь: https://splitsystema48.ru/instrukcii-po-ekspluatacii-kondicionerov.html

d) No. 1 or No. 4 pin of DSW4 is ON.
e) At starting the judgement system operation for the refrigerant amount, the indoor and outdoor air temperature is beyond the applicable range.
f) The refrigerant cycle is varied widely.

In case except a) to e), it may be impossible to utilize the judgement because that the refrigerant cycle is varied widely. This is due to the installation condition by lower indoor heat load, etc. In this case, calculate the additional refrigerant according to the total piping length.

3. It takes about 20 to 120 minutes for the automatic refrigerant amount judgement operation.

4. The 7-segment indication during the refrigerant amount judgement is changed to the protection control code by the protection control, it is not abnormal. As for the protection control code, refer to the sheet attached to the inside of the outdoor unit service cover.

6.4.2. Simple judgement system for refrigerant amount

You can check the excess or the deficiency of the refrigerant by means of the data that is provided by the check mode of the 7-segment display. The following checking procedure is useful during the test run and the maintenance.

◆ **Before the checking procedure:**

1. Operate all the indoor units at the TEST RUN mode and operate all the indoor units at the HIGH speed.

2. Check the following items in order to make sure that the refrigerant cycle is stable.

1) The continuous operation lasts more than 20 minutes.

2) Td·SH is 25 to 45 ºC in cooling or 15 to 45 ºC in heating

3) Ps is 0.4 to 1.1 MPa in cooling or 0.2 to 1.1 MPa in heating

4) Pd is 2.0 to 3.5 MPa in cooling or 1.6 to 3.5 MPa in heating

Td·SH: Discharge gas temperature superheat

Ps: Suction pressure, Pd: Discharge pressure

3. Collect the checking data that is provided by the check mode of the 7-segment display.

4. Perform the checking according to the following procedure.

Judge according to the following target value:

Cooling	Refrigerant flow charge is controlled by indoor unit expansion valve
Heating	Refrigerant flow charge is controlled by outdoor unit expansion valve

Applicable air temperatures for the checking procedure:

Cooling	Room temperature: 20°C~30°C (DB) Outdoor temperature: 15°C (DB) or more
Heating	Room temperature: 20°C~30°C (DB) Outdoor temperature: 0°C~15°C (DB)

◆ **Checking procedures for cooling**

◈ Process

1. Convert iE (indoor unit expansion valve opening) with the following table:

Indoor Unit HP	Conversion
0.8 to 6 HP	iE
8 and 10 HP	iE × 2.0

2. Sum up the converted values of iE.

Все каталоги и инструкции здесь: https://splitsystema48.ru/instrukcii-po-ekspluatacii-kondicionerov.html

3. Calculate the total frequency (=H1(Inverter frequency)+Constant compressor reduced frequency) according to the following table:

	Converted frequency of constant speed compressor			
Outdoor Unit Model	MC2	MC3	MC4	MC5
RAS-14/16FSN2	50	–	–	–
RAS-18/20FSN2	50	50	–	–
RAS-22/24FSN2	50	77	–	–
RAS-26/28FSN2	77	77	–	–
RAS-30~36FSN2	77	77	50	–
RAS-38~42FSN2	77	77	50	77
RAS-44~48FSN2	77	77	77	77

◈ Judgement

- If total of converted iE/Total frequency < 0.7 = Insufficient refrigerant

- If total of converted iE/Total frequency > 1.6 = Excessive refrigerant

◆ Checking procedures for heating

◈ Process

1. Detect oE (total outdoor unit expansion valve opening) = oE1+oE2+oE3+oE4

2. Calculate the total frequency (=H1(Inverter frequency)+Constant compressor reduced frequency) according to the previous table:

◈ Judgement

- If total oE/Total frequency < 0.8 x Target value = Insufficient refrigerant

- If total oE/Total frequency > 1.2 x Target value = Excessive refrigerant

Refer to the following table to use the target value in heating.

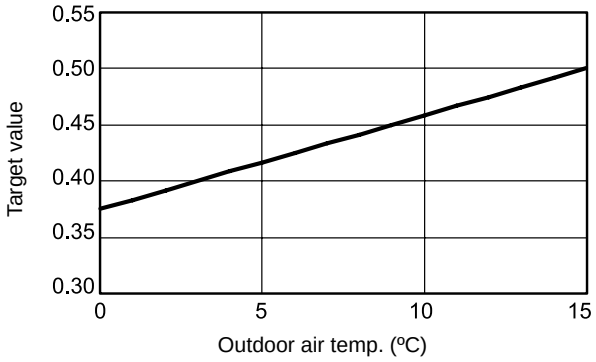

◆ Examples

◈ Cooling process

	Indoor units				
	4HP	4HP	4HP	2HP	2HP
iE (%) (from the checking data)	32	38	30	20	18
Calculate value of iE	32 (Hold)	38 (Hold)	30 (Hold)	20 (Hold)	18 (Hold)
Total of iE (a)	138 (32+38+30+20+18)				
Total frequency (b)	130 (80+50 (constant comp. frequency))				
Judgement	OK: 0.7 ≤ (a) / (b) ≤ 1.6				

◈ Heating process

	Indoor units					Outdoor unit
	4HP	4HP	4HP	2HP	2HP	16HP
Ti (indoor suction temperature)	26	27	23	23	25	–
To (outdoor temperature) (°C)						7
Total of oE (a)	–					
Total of frequency (b)	130 (80+50 (constant comp. frequency)					
Judgement	OK: (a) / (b) ≈± 20% of target value					

Все каталоги и инструкции здесь: https://splitsystema48.ru/instrukcii-po-ekspluatacii-kondicionerov.html

7. Troubleshooting

Contents

7. Troubleshooting 93
7.1.2. Emergency operation 95
7.1.3. Failure of the power supply to the indoor unit and the remote control switch 101
7.1.4. Abnormal transmission between the remote control switch and the indoor unit 102
7.1.5. Abnormal operation of the devices 103
7.2. Troubleshooting procedure 111
7.2.1. Alarm code indication of remote control switch 111
7.2.2. Troubleshooting by alarm code 113
7.2.3. Troubleshooting in check mode 158
7.2.4. Troubleshooting by means of the 7 segment display 164
7.2.5. Running current of the compressor 170
7.2.6. Protection control code on the 7-segment display 172
7.2.7. Activating condition of the protection control code 173
7.3. Procedure for checking each main part 175
7.3.1. Self-checking procedure of PCB by means of the Remote Control Switch 175
7.3.2. Self-Checking procedure of the Remote Control Switch 177
7.3.3. Self-Checking procedure of the Indoor Unit PCB (only for RPK) 179
7.3.4. Procedure of checking other main parts 180

Все каталоги и инструкции здесь: https://splitsystema48.ru/instrukcii-po-ekspluatacii-kondicionerov.html

7.1. Initial troubleshooting

7.1.1. Checking by means of the 7-segment display

■ **Simple checking procedure by means of the 7-segment display**

1. Turn on all the indoor units which are connected to the outdoor unit.
2. Turn on the outdoor unit
3. Auto-addressing starts. (Outdoor unit printed circuit board PCB 1)

   During the auto-addressing, you can check the following items by means of the 7-segment display of the outdoor unit.

   – Disconnection of the power supply to the Indoor Unit.

   – Duplication of the Indoor Unit number. See alarm code 35

Normal case:

The 7-segment display of the outdoor unit is not indicated.

Abnormal case:

If there is something wrong, the 7-segment display of the outdoor unit displays the following indications:

Cause	Indication	Remarks
a. The indoor units are not supplied with power.	03	continues to flash after 30 seconds.
b. Disconnection of the operating line between the outdoor units and the indoor units.	03	continues to flash after 30 seconds.
c. Duplicated settings of the indoor unit number on the rotary switch RSW (Refer to the section "Troubleshooting by means of the Alarm Code" for the description of the alarm code "35").		

Все каталоги и инструкции здесь: https://splitsystema48.ru/instrukcii-po-ekspluatacii-kondicionerov.html

7.1.2. Emergency operation

■ **Emergency mode operation (RAS-14FSN2 to RAS-48FSN2 Only)**

1. Emergency mode operation from Remote Control Switch

   If compressor/fan motor is failed, emergency operation mode is available to change from the remote control switch. Even if the compressor is failed, the air conditioning operation is continuously available until the troubleshooting is performed.

Alarms corresponding to emergency operation (*)

– Inverter compressor failure
  06: Abnormality of inverter voltage
  23: Failure of discharge gas thermistor
  48: Inverter overcurrent protection activation
  51: Failure of inverter current sensor
  53: Transistor module protection activation
  54: Failure of inverter fin thermistor

– Constant speed compressor failure
  23: Failure of discharge gas thermistor
  39: Abnormality of running current at constant speed compressor

– Outdoor fan motor failure
  56 to 58: Abnormal outdoor fan operation

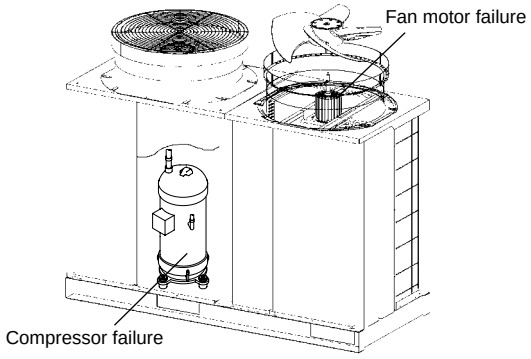

a. Procedure

   By pressing “TEMP.” ⌄ ⌃ for 3 seconds simultaneously, emergency mode operation starts. “EMG” can be displayed on the LCD during this operation.

b. Operation Condition

– Inverter compressor failure
  Emergency operation is performed by other compressors (except inverter compressor) when the inverter compressor is failed.

  The compressor is forced to stop for compressor protection under the following condition:

  Total capacity of thermo ON I.U. < 50% of O.U. Capacity and
  Total capacity of thermo ON I.U. < 10HP

– Constant speed compressor failure
  Emergency operation is performed by other compressors (except failure compressors).

– DC fan motor failure

  Emergency operation is performed by other DC fan motor (except failure DC fan motor).

PC-ART

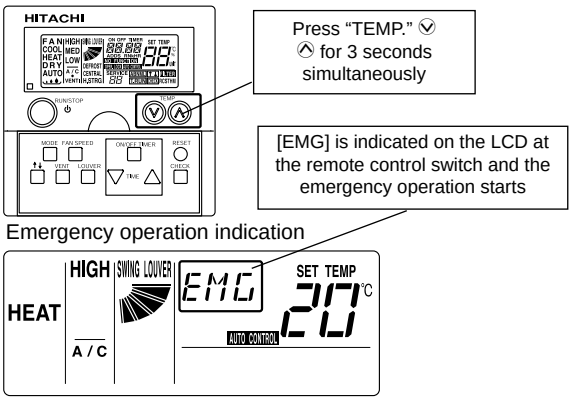

NOTES:

– *Emergency operation is available only when all the indoor unit and remote control to be connected are for H-LINK II.*

– *Emergency operation is available only for when the alarm codes above (*) are indicated.*

– *The emergency operation does not correspond to the failures of inverter PCB or fan controller.*

– *This operation is an emergency but a temporary operation until the service people comes. If the alarm is indicated again during the emergency mode operation, the alarm cannot be canceled.*

Все каталоги и инструкции здесь: https://splitsystema48.ru/instrukcii-po-ekspluatacii-kondicionerov.html

2. Emergency mode operation from PCB for inverter compressor failure

   This operation is an emergency operation by the constant speed compressor when the inverter compressor is failed.

Alarms corresponding to inverter compressor failure

04: Abnormality of inverter transmitting

06: Abnormality of inverter voltage

23: Failure of discharge gas thermistor

48: Inverter overcurrent protection activation

51: Failure of inverter current sensor

53: Transistor module protection activation

54: Failure of inverter fin thermistor

a). Procedure

1. Turn OFF all the main switches of outdoor and indoor units.
2. Check the inverter PCB. If inverter PCB is faulty, disconnect the wiring (U, V, W) of diode module. (Insulate the disconnected terminals.)
3. Turn ON DSW5-#1 of outdoor unit PCB1.
4. Turn ON the power supply.
5. Start the operation by remote control switch.

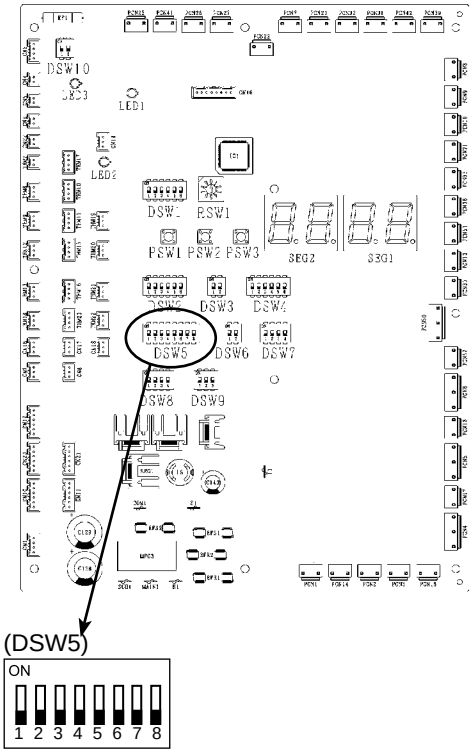

b). Operation condition

– Indoor unit operation capacity
  The compressor is forced to stop for compressor protection under the following condition:

  Total capacity of thermo ON I.U. < 50% of O.U. Capacity, and

  Total capacity of thermo ON I.U. < 10HP

  (Small capacity of thermo ON indoor unit may cause a constant speed compressor failure because the compressor is operated and stopped repeatedly.)

NOTES:

– *Measure the insulation resistance of inverter compressor.*
  Do not perform the emergency operation when the insulation resistance is 0 Ω
  Other compressor may be damaged because there is a possibility that refrigerant oil may be oxidized.

– *Total operating capacity of indoor unit should be 10HP and over.*
  (Less than 10HP: Forced stoppage)

– *In this emergency operation, compressor frequency cannot be controlled at each 1 Hz. Therefore, alarm code "07", "43", "44", "45", "45" or "47" may be indicated on LCD.*

– *This emergency operation does not provide sufficient cooling and heating capacity.*

– *This mehod is an emergency but a temporary operation when the inverter compressor is damaged. Therefore, change the new one as soon as possible.*

– *Turn OFF DSW5 of outdoor PCB1 after replacing the compressor.*
  If this setting is not performed, the inverter compressor will be damaged.

Все каталоги и инструкции здесь: https://splitsystema48.ru/instrukcii-po-ekspluatacii-kondicionerov.html

3. Emergency mode operation from PCB for constant speed compressor failure

   This operation is an emergency operation by the other compressor when the constant speed compressor is failed.

Alarms corresponding to constant speed compressor failure

23: Failure of discharge gas thermistor

39: Abnormality of running current at constant speed compressor

a Procedure

1. Turn OFF all the main switches of outdoor and indoor units.
2. Turn ON DSW5 of outdoor PCB1 as shown in the table below.
3. Turn ON the power supply.
4. Start the operation by remote control switch.

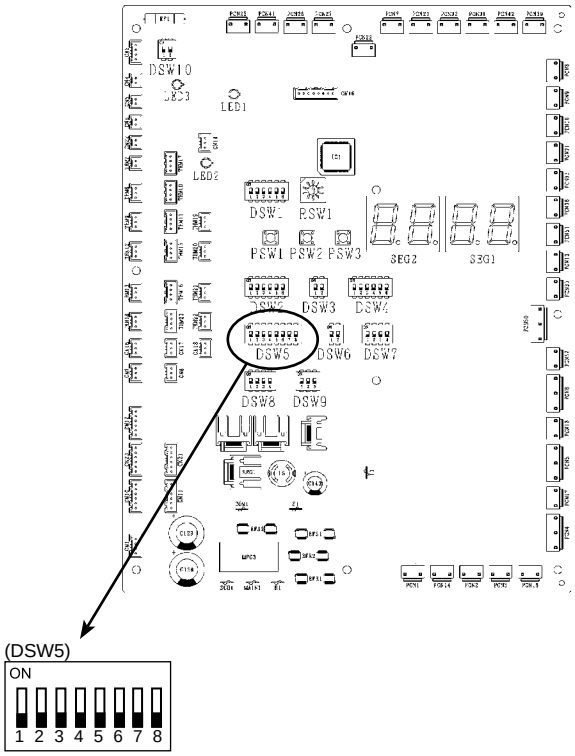

DSW5	Compressor	HP
1	Inverter Compressor	14-48HP
2	Constant Speed Compressor 1	14-48HP
3	Constant Speed Compressor 2	18-48HP
4	Constant Speed Compressor 3	30-48HP
5	Constant Speed Compressor 4	42-48HP

b. Operation Condition

– Td Thermistor

Td thermistor on the failure constant speed compressor is ignored by setting DSW5.
If the thermistor is short-circuited, this operation is available.

NOTES:

– *Measure the insulation resistance of constant speed compressor.*
Do not perform the emergency operation when the insulation resistance is 0 Ω
Other compressor may be damaged because there is a possibility that refrigerant oil may be oxidized.

– *In this emergency operation, compressor frequency cannot be controlled at each 1 Hz. Therefore, alarm code "07", "43", "44", "45", "45" or "47" may be indicated on LCD.*

– *This emergency operation does not provide sufficient cooling and heating capacity.*

– *This mehod is an emergency and temporary operation when the constant speed compressor is damaged. Therefore, change the new one as soon as possible.*

– *Turn OFF DSW5 on outdoor PCB1 after replacing the compressor.*
If this setting is not performed, the constant speed compressor will be damaged.

Все каталоги и инструкции здесь: https://splitsystema48.ru/instrukcii-po-ekspluatacii-kondicionerov.html

■ Method of collecting refrigerant

1 In case that compressor operates

Perform only when collecting refrigerant is required.

Process No.	Procedure	Remarks
1	Turn OFF the main switch of O.U.	
2	Connect manifold to the check joint at low and high pressure sides in O.U.	
3	Turn ON the main switch of O.U.	
4	<In case of comp. failure> DSW5 ON (O.U. PCB1), so that the failure comp. will not run.	Refer to (2) and (3) of “Emergency Mode Operation from PCB” in “Emergency Mode Operation” (item 1.1.4) for more details.
5	Pre-refrigerant collection during cooling operation. – Start the test run by DSW4-#1 ON (O.U. PCB1). – The test run should run for approx. 20min. (until Ps>0.3MPa, Td>75oC) – Ps is indicated on 7-seg. (O.U. PCB1). – Close the gas valve immediately and perform the forced stoppage (DSW4-#4 ON) when Ps <0.2MPa. – Cancel cooling operation (DSW4-#1 OFF). – Cancel the forced stoppage (DSW4-#4 OFF).	After closing the gas stop valve, the decrease of Ps value is fast. To guarantee the reliability of the comp., make sure that the decrease does not reach Ps<0.1MPa when performing the forced stoppage.
6	Perform the operation for exchange comp. – Close all the gas stop valves. – Press PSW3 for 3 sec. after DSW4-#6 ON (O.U. PCB1) (cooling operation starts).	This operation is performed up to a maximum of 10 min. If the inverter comp. is excluded, the operation starts after 3 min.
7	Finish the operation for exchange comp. (one of the followings): – 10 min. has passed. (“STP” (7-seg.) is indicated.) – “08” (7-seg.) is indicated. – When Ps≤0.1MPs (1 min. continuously) within 10 min., “STP” (7-seg.) is indicated.	
8	Close the liquid stop valve completely.	To avoid the spillage and leakage of refrigerant when the check valve is broken.
9	Check the leakage of the check valve on the discharge gas side. – DSW4-#4 ON (the comp. forced stoppage). The comp. will not run regardless of the remote control switch command. – Check the variation of Ps. Make sure that the Ps increase is within 0.03MPa for 2 min. after the Ps increase at the stoppage. (approx. 5 min.) Make sure that Pd>Ps at this time.+ 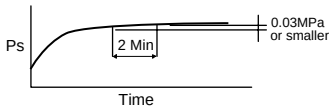 	– When performing by the comp. replacing mode, leakage of the check valve can be checked by Ps variation because SVA opens so that the discharge gas side of inverter comp. is connected to the lower pressure side. – Within 0.03MPa/2 min. is the permissible limits for the check valve on the discharge gas side. – The leakage of the check valve may cause an incorrect brazing due to the gas pressure at the brazing of the discharge piping. – If the comp. replacing mode is performed again, set DSW4-#4 to OFF side and start from Process No. 4 after 10 min.
10	Collect the refrigerant according to either A or B: (depending on the Process No.9.) A) If the leak rate at the Process No.9 is within the specification, collect the refrigerant only at the low pressure side. B) If the leak rate at the Process No. 9 is greater than the specification, collect all the refrigerant of the O.U. side by the collector.	– The discharge of the refrigerant in the atmosphere is strictly forbidden. Make sure that the refrigerant is collected by the collector. – Measure the quantity of the collected refrigerant. – In case of B, perform (2) of “In case that compressor does not operate” in “Method of Collecting Refrigerant”.
11	After collecting the refrigerant, remove the low pressure side charge hose at the collector side, so that the low pressure side of the refrigerant cycle will be the atmosphere pressure.	– Make sure that there is no pressure increase of the low pressure sides after collecting the refrigerant. – Make sure that the refrigerant cycle is the atmosphere pressure. Otherwise, problems such as the blowing of gas and the suction of the cutting material may occur when removing the comp.
12	Turn OFF the main switch of the O.U.	

Все каталоги и инструкции здесь: https://splitsystema48.ru/instrukcii-po-ekspluatacii-kondicionerov.html

Process No.	Procedure	Remarks
13	In case collecting refrigerant oil in oil separator is required: – Connect the charge hose to the charge port of return oil circuit. – Take out the refrigerant oil from the charge hose at the release side to the oil pan. – If there is no refrigerant oil in the charge hose at the release side, it may remain in the oil separator. – Apply pressure gradually with nitrogen gas from the check joint at low pressure side, push the refrigerant oil in the oil separator with the pressure and take it out from charge hose at the release side.	– This work is necessary for replacing comp. and return oil circuit. – Measure the collected refrigerant oil quantity. – Check that no refrigerant oil remains in the oil separator when replacing the oil return circuit. The refrigerant oil may leak from the removing part of flare nut if the procedure on the left may not be followed. – If the refrigerant at the high pressure side remains, pressure from check joint at low pressure side should be applied lower than the one from check joint at high pressure side.
14	Perform replacing comp., return oil circuit and electrical parts.	Removing electrical box may be required.
15	With the electrical box mounted, check the wirings by contacting (except the power line for comp.) For the power line for comp., insulate the wiring terminal with vinyl tape.	
16	Turn ON the main switch of O.U.	This process is before removing or after mounting the electrical box.
17	Turn DSW4-#4 ON of O.U. PCB1	
18	Turn DSW4-#6 ON of O.U. PCB1	Power supply is ON, auto-address setting is completed and then “STP” is flashed on 7-seg. (O.U. PCB1). SVA is ON (open).
19	Charge the refrigerant oil. Perform the vacuuming from the check joint at low and high pressure sides. Connect the charge hose to the charge port of return oil circuit and charge the refrigerant oil.	– Calculation for recharge quantity of refrigerant is required if process No.12 is performed. (Refer to the item “Removing compressor” for calculating method.) – Use a clean charge hose. – Use a container with a small opening so that the refrigerant oil does not absorb the moisture in the atmosphere. – If the refrigerant oil is not clean, it should be changed as new one.
20	Disconnect the charge hose from the charge port of return oil circuit. Perform the vacuuming from the check joint at low pressure side.	In case of collecting refrigerant at only low pressure side in process No. 9: Vacuuming cannot be performed from high pressure side.
21	Turn OFF the main switch of O.U.	
22	Set DSW4-#4, 6 back to the original setting.	Refer to Process No. 17 and 18.
23	Check that the power line for comp. and wirings are connected correctly.	Check the main switch is OFF.
24	Recharge the collected refrigerant (process No.10) from the check joint at high pressure sides. For the remained refrigerant quantity: Open the liquid and gas stop valves completely and set DSW4-#1 to ON side (O.U. PCB1). Then recharge it from the liquid stop valve check joint during cooling operation.	
25	Check the liquid and gas stop valves are open completely.	

O.U.: Outdoor Unit
I.U.: Indoor Unit
7-Seg.: 7-Segment
Comp.: Compressor

Все каталоги и инструкции здесь: https://splitsystema48.ru/instrukcii-po-ekspluatacii-kondicionerov.html

2 In case that compressor does not operate

Perform only when collecting refrigerant of outdoor unit is required.
(Perform the replacing compressor and oil return circuit if necessary.)

Process No.	Procedure	Remarks
1	Turn OFF the main switch of O.U.	
2	Connect manifold to the check joint* at low and high pressure sides of O.U.	* Not the check joint of liquid/gas stop valves.
3	Close the liquid and gas stop valve completely.	To improve the performance of vacuuming.
4	(Work 1: Collecting refrigerant in O.U.) – Collect the refrigerant from check joint at high and low pressure sides using the collector. (Work 2: Collecting refrigerant oil in oil separator) – Collecting refrigerant oil in oil separator: – Connect the charge hose to the charge port of return oil circuit. – Take out the refrigerant oil from the charge hose at the release side to the oil pan. – If there is no refrigerant oil in the charge hose at the release side, it may remain in the oil separator. – Apply pressure gradually with nitrogen gas from the check joint at low pressure side, push the refrigerant oil in the oil separator with the pressure and take it out from charge hose at the release side.	– The discharge of the refrigerant in the atmosphere is strictly forbidden. Make sure that the refrigerant is collected by the collector. – Measure the quantity of the collected refrigerant and refrigerant oil. – For the replacing comp. and return oil circuit: Perform Work 1 firstly and then Work 2. – Measure the collected refrigerant oil. – Check that no refrigerant oil remains in the oil separator when replacing the return oil circuit. The refrigerant oil may leak from the removing part of flare nut if the procedure may not be followed.
5	Remove charge hose at the low and high pressure sides check joint, so that the low pressure side of the refrigerant cycle will be the atmosphere pressure. Disconnect the charge hose at charge port of return oil circuit.	– Make sure that there is no pressure increase of the low pressure side after collecting the refrigerant. – Make sure that the refrigerant cycle is the atmosphere pressure. Otherwise, problems such as the blowing of gas and the suction of the cutting material may occur when removing the comp.
6	Perform replacing comp., return oil circuit and electrical parts.	Removing electrical box may be required.
7	With the electrical box mounted, check the wrings by contacting (except the power line for comp.) For the power line for comp., insulate the wiring terminal with vinyl tape.	
8	Turn ON the main switch of O.U.	This process is before removing and mounting electrical box.
9	Set DSW4-#4 to ON side (O.U. PCB1).	
10	Set DSW4-#6 to ON side (O.U. PCB1).	Power supply is ON, auto-address setting is completed and then “STP” is flashed on 7-seg. (O.U. PCB1). SVA is ON (open).
11	Charge the refrigerant oil. (For Process No. 4-Work 2) Perform the vacuuming from the check joint at low and high pressure sides. Connect the charge hose to the charge port of return oil circuit and charge the refrigerant oil.	– Calculation for recharge quantity of refrigerant is required if process No.4-Work 2 is performed. (Refer to the item “Removing Compressor” for calculating method.) – Use a clean charge hose. – Use a container with a small opening so that the refrigerant oil does not absorb the moisture in the atmosphere. – If the refrigerant oil is not clean, it should be changed as new one.
12	Disconnect the charge hose from the charge port of return oil circuit. Perform the vacuuming from the check joint at low pressure side.	
13	Turn OFF the main switch of O.U.	
14	Set DSW4-#4, #6 back to the original setting.	Refer to Process No. 9 and 10.
15	Check that the power line for comp. and wiring are connected correctly.	
16	Recharge the collected refrigerant (Process No.4) from the check joint at high pressure side. For the remained quantity: Open the liquid and gas stop valve completely and set DSW4-#1 to ON side (O.U. PCB1). Then recharge it from the liquid stop valve check joint during cooling operation.	
17	Check the liquid and gas stop valves are open completely.	

O.U.: Outdoor Unit
I.U.: Indoor Unit
7-Seg.: 7-Segment
Comp.: Compressor

Все каталоги и инструкции здесь: https://splitsystema48.ru/instrukcii-po-ekspluatacii-kondicionerov.html

7.1.3. Failure of the power supply to the indoor unit and the remote control switch

■ **The LED and the LCD are not indicated.**

■ **Not operated**

If the fuses are blown out or a breaker is activated, investigate the cause of the overcurrent and take the necessary action.

Phenomenon	Cause	Check item	Action (Turn OFF the main switch)
Power failure or power is not ON		Measure the voltage by means of the voltmeter	Supply the power
Blown out fuse or activation of the breaker at the power source	Short circuit supplied between the wires	Check for any uncovered part of the wires	Remove the cause of the short circuit and replace the fuse
	Short circuit of the wires to earth	Measure the insulation resistance	Remove the cause of the short circuit and replace the fuse
	Failure of indoor unit fan motor	Measure resistance between wires and insulation resistance	Replace AC chopper for indoor unit fan, fan motor and fuse
	Failure of AC chopper for indoor fan		Replace AC chopper for indoor unit fan and fuse
Blown out fuse at the control circuit	Short circuit supplied between the wires	Check for any uncovered part of the wires	Remove the cause of the short circuit and replace the fuse
	Short circuit of the control circuit to earth	Measure the insulation resistance	Remove the cause of the short circuit and replace the fuse
	Failure of indoor unit fan motor	Measure resistance between wires and insulation resistance	Replace AC chopper for indoor unit fan, fan motor and fuse
	Failure of AC chopper for indoor fan		Replace AC chopper for indoor unit fan and fuse
Failure of the transformer at the indoor unit side		Measure the voltage at the secondary side	Replace the transformer
Disconnected cable of the remote control switch		Connect the cable	Replace the cable or repair the cable
Insufficient contacting at the connectors of the remote control switch	Insufficient connection or incorrect connection of the indoor unit PCB	Check the connectors	Correctly connect the connector
	Insufficient connection or incorrect connection of the indoor unit PCB in the remote control switch		
Failure of the remote control switch		Check the remote control switch by means of the self-check mode *1)	Replace the remote control switch if it failed
Failure of PCB	Unconnected wires to PCB	Check the connectors	Correctly connect the wires
	Failure of PCB	Check PCB by means of the self-check mode *2)	Replace PCB if it failed
Incorrect wiring connection		Take action according to the procedure that is displayed in "TEST RUN"	

*1): Refer to section "*Self-checking of remote control switch*".

*2): Refer to section "*Self-checking of PCB using remote control switch*".

Все каталоги и инструкции здесь: https://splitsystema48.ru/instrukcii-po-ekspluatacii-kondicionerov.html

7.1.4. Abnormal transmission between the remote control switch and the indoor unit

■ **RUN LED on the remote control switch:**
Flickering every 2 seconds.

Phenomenon	Cause	Check item	Action (Turn OFF the main switch)
Disconnection or insufficient contacting of the remote control cable		Check the cable and the connections	Repair the cable or connect the cable
Incorrect wiring connection (incorrect polarity)		Check the wiring and the connections	Repairing
Failure of the remote control switch		Check the remote control switch by means of the self-check mode *1)	Replace the remote control switch if the remote control switch is faulty
Failure of PCB (in the indoor unit and the remote control switch)	Disconnected wire to PCB	Check the connectors	Correctly connect the wires
	Failure of PCB	Check PCB by means of the self-check mode *2)	Replace PCB if it failed

*1): Refer to section "*Self-checking of remote control switch*".

*2): Refer to section "*Self-checking of PCB using remote control switch*".

Все каталоги и инструкции здесь: https://splitsystema48.ru/instrukcii-po-ekspluatacii-kondicionerov.html

7.1.5. Abnormal operation of the devices

In the case that no abnormality (Alarm Code) is indicated on the remote control switch, and normal operation is not available, take necessary action according to the procedures mentioned below.

Phenomenon	Cause		Check item	Action (Turn OFF the main switch)
RUN LED is ON and the LCD is indicated However, the system does not operate (For example, the indoor fan, the outdoor fan or the compressor does not operate)	Failure of the indoor unit fan motor	Disconnected coil	Measure the coil resistance by means of the tester	Replace the Indoor unit fan motor
		Burnt-out coil	Measure the insulation resistance	
	Failure of the outdoor unit fan motor	Disconnected coil	Measure the coil resistance by means of the tester	Replace the outdoor unit fan motor
		Burnt-out coil	Measure the insulation resistance	
	Failure of the magnetic switch for the outdoor unit fan motor	Insufficient contacting	Measure the voltage between the contacting parts	Replace PCB for the outdoor unit
	Failure of the comp. motor		Measure the resistance between two wires	Replace the compressor
	Failure of the comp.		Check for an abnormal sound from the Comp.	
	Failure of the magnetic switch for comp.	Insufficient contacting	Check that the magnetic switch activates correctly or not	Replace the magnetic switch
	Failure of one of PCBs	Disconnected wiring to PCB	Check the connections	Correctly connect the wiring
		Failure of PCB	Check PCB by means of the self-check mode *1)	Replace PCB if it failed
The Comp. does not stop or start even if the setting temperature on the LCD changes to *3)	Failure of air inlet thermistor	Failure of thermistor	Check it by self-checking *2)	Replace or correctly connect the wires if Abnormal Operation exists
		Disconnection of thermistor		
	Abnormal operation of the remote control switch cord			
	Failure of the indoor unit PCB		Check PCB by means of the self-check mode *1)	Replace PCB if it failed

7

Все каталоги и инструкции здесь: https://splitsystema48.ru/instrukcii-po-ekspluatacii-kondicionerov.html

Abnormal operation of the devices (Cont.)

Phenomenon	Cause	Check item	Action (Turn OFF the main switch)
The Comp. does not stop or start even if the setting temperature on LCD changes to *3)	Incorrect optional setting	Check the setting condition of "thermistor of remote control switch." by means of the optional setting Setting and control: "00": Control by means of the indoor thermistor for the suction air "01": Control by means of the thermostat of the remote control switch "02": Control by means of the average value of the indoor thermistor for the suction air and the thermostat of the remote control switch	If the thermostat of the remote control switch is not used, set at "00"

*1): Refer to section "*Self-checking of PCB using remote control switch*".

*2): Refer to section "*Troubleshooting in check mode by remote control switch*".

*3): Even if the remote control switches are normal, the compressor does not operate under the following conditions:

- Indoor temp. is lower than 21°C or outdoor temp. Is lower than -5°C during the cooling process (DB).
- Indoor temp. is higher than 27°C (DB) or outdoor temp. is higher than 15°C (WB) during the heating process.
- When a cooling (or heating) process signal is given to the outdoor unit and a different mode as heating (or cooling) process signal is given to the indoor units.
-. When an emergency stop signal is given to outdoor unit.

Все каталоги и инструкции здесь: https://splitsystema48.ru/instrukcii-po-ekspluatacii-kondicionerov.html

Abnormal operation of the devices (Cont.)

Phenomenon	Cause		Check item	Action (Turn OFF the main switch)
Indoor fan speed does not change	Failure of the Discharge Air Temp. Thermistor	Failure of the Thermistor	Check the Thermistor by means of the self-check mode *2)	Replace or Correctly connect the wiring when it is abnormal
		Disconnected Wire of the Thermistor		
	Failure of the Remote Control Switch		Check it by means of the self-check mode *1)	Replace if it failed
	Failure of PCB for the indoor unit			Replace if PCB fails
	Failure of AC chpper for indoor unit		Check the indoor unit stoppage when the remote control switch is swicthed OFF	Replace if AC chpper is failed
No defrost operation mode is available during the heating process or the defrost operation continues	Failure of thermistor for outdoor evaporating temp. during heating	Failure of thermistor	Replace or correctly connect when it is abnormal	
		Disconnected wire of thermistor		
	Failure of 4-way valve	Disconnected 4-way valve coil	Measure the resistance of coil	Replace the 4-way valve
		Incorrect activation of 4-way valve	Enforced power supply	
	Disconnected control wires between indoor unit, CH unit and outdoor unit		Check the connectors	Correctly connect the wiring
	Failure of the outdoor units of PCB	Disconnected wiring to PCB	Check the connectors	Correctly connect the wiring
		Failure of PCB	Check PCB by means of the self-check mode *1)	Replace PCB when the check mode is not available
	Failure of the Indoor Unit of PCB	Disconnected wiring to PCB	Check the connectors	Correctly connect the wiring
		Failure of PCB	Check PCB by means of the self-check mode *1)	Replace if PCB fails
The LED and the LCD on the remote control switch remain ON	Failure of PCB in the indoor unit or the remote control switch			

*1): Refer to section "*Self checking of PCB using remote control switch*".

*2): Refer to section "*Troubleshooting in check mode by remote control switch*".

Все каталоги и инструкции здесь: https://splitsystema48.ru/instrukcii-po-ekspluatacii-kondicionerov.html

Abnormal operation of the devices (Cont.)

Phenomenon	Cause		Check item	Action (Turn OFF the main switch)
Insufficient cooling process	Indoor heat load is greater than the cooling capacity		Calculate the heat load	Use a bigger unit
	Excessively low suction pressure	Gas leakage or shortage of refrigerant	Measure superheat	Correctly charge the refrigerant after repairing the gas leakage
		Excessively small diameter tube or long piping	Measure and check the field-supplied pipes	Use the correct pipes
		Incorrect activation of the check valve of the outdoor unit	Check whether or not the temp. difference exists before/after the check valve	Replace the check valve for the outdoor unit
		Failure or malfunction of the expansion valve	Check for clogging	Remove the clogging
			Check the connection cord and the connector	Replace the connector
			Is there an operation sound from the coil?	Replace the coil
			Is the thermistor on the compressor normal?	Replace the thermistor
			Is the thermistor installed correctly on compressor?	Correctly install the thermistor
		Clogged strainer in the indoor unit; clogging at the low pressure piping	Check the temp. difference at the inlet and the outlet of the strainer	Replace the strainer in the indoor unit
		Clogging at the low pressure piping	Check the temp. difference	Remove the clogging
		Insufficient air flow to the indoor unit heat exchanger	Check for clogged air filter	Clean the air filter
			Check for an obstacle at the inlet or the outlet	Remove the obstacles
		Excessively low air temp. to the indoor unit heat exchanger	Insufficient speed of the indoor unit fan motor?	Replace the fan motor
			Short-circuited indoor unit air?	Remove the cause of the short-circuited air

Все каталоги и инструкции здесь: https://splitsystema48.ru/instrukcii-po-ekspluatacii-kondicionerov.html

Abnormal operation of the devices (Cont.)

Phenomenon	Cause		Check item	Action (Turn OFF the main switch)
Insufficient cooling process	Excessively high discharge pressure	Insufficient air flow to the outdoor unit heat exchanger	Check clogging of the outdoor unit heat exchanger?	Remove the clogging
			Obstacles at inlet or the outlet of outdoor unit heat exchanger?	Remove the obstacles
			Is the service area for the outdoor unit sufficient?	Secure the service area
			Correct fan speed?	Replace the fan motor
		Excessively high air temp. to the outdoor unit heat exchanger	Short-circuited air to the outdoor unit?	Remove the cause of the short-circuited air
			Any other heat load near the outdoor unit?	Remove the heat source
		Excessively charged refrigerant	Check Expansion valve opening	Correctly charge the refrigerant
		Non-condensate gas in cycle	Check each temp. and each pressure	Charge the refrigerant after the vacuum pumping
		Clogging of the discharge piping	Check for clogging	Remove the clogging
		Failure or malfunction of the expansion valve	Check for clogging	Remove the clogging
			Check the connection cord and the connector	Replace the connector
			Is there an operation sound from the coil?	Replace the coil
			Is the thermistor on the compressor normal?	Replace the thermistor
			Is the thermistor installed correctly on the compressor?	Correctly install the thermistor
	Malfunction or internal leakage of the 4-way valve		Check the temp. difference at the inlet and the outlet of the 4-way valve	Replace the 4-way valve
	Excessively low suction pressure	Failure of bypass solenoide valve	Checking for leakage of solenoid valve	Replace solenoid valve
		Malfunction or internal leakage of the 4-way valve	Check the Temp. Difference between the Inlet and the Outlet of 4-Way Valve	Replace the 4-way valve
	Discharge temp. of the indoor unit is unstable		Check the expansion valve of the indoor unit in the same system	Replace the failed expansion valve of the indoor unit

Все каталоги и инструкции здесь: https://splitsystema48.ru/instrukcii-po-ekspluatacii-kondicionerov.html

Abnormal operation of the devices (Cont.)

Phenomenon	Cause		Check item	Action (Turn OFF the main switch)
Insufficient heating process	Indoor heat load is greater than the heating capacity		Calculate the heat load	Replace the unit with a bigger unit
	Excessively low suction pressure	Gas leakage or insufficient refrigerant charge	Measure superheat	Correctly charge the refrigerant after the gas leakage check and repairing
		Excessively small diameter or long piping	Measure the field-supplied piping	Use the specified pipes
		Failure or malfunction of the expansion valve	Check for clogging	Remove the clogging
			Check the connection cord and the connector	Replace the connector
			Is there an operation sound from the coil?	Replace the coil
			Is the thermistor on the compressor normal?	Replace the thermistor
			Is the thermistor installed correctly on compressor?	Correctly install the thermistor
		Clogging of I.U./O.U./CH-Unit strainer	Check the temp. difference between the inlet and the outlet of strainer	Replace the strainer for the outdoor unit or the indoor unit
		Clogging of suction piping	Check the temp. difference of each part	Remove the clogging
		Insufficient air flow through the outdoor unit heat exchanger	Is the outdoor unit heat exchanger clogged?	Remove the clogging
			Are there any obstacles at the inlet or the outlet of outdoor unit?	Remove the obstacles
			Is the service area for the outdoor unit sufficient?	Secure a sufficient service area
			Check the speed of the outdoor unit fan	Replace the fan motor
		Excessively low air temp. through the outdoor unit heat exchanger	Check for any short-circuited air to the outdoor unit	Remove the cause of the short-circuited air
		Defrosting is insufficiently completed	Check the thermistor for the defrost operation	Replace the thermistor for the defrost operation

Все каталоги и инструкции здесь: https://splitsystema48.ru/instrukcii-po-ekspluatacii-kondicionerov.html

Abnormal operation of the devices (Cont.)

Phenomenon	Cause		Check item	Action (Turn OFF the main switch)
Insufficient heating process	Excessively high discharge pressure	Insufficient air flow to the indoor unit heat exchanger	Check the filter for a clogging	Remove the clogging
			Check for any obstacles at the inlet or the outlet of the indoor unit	Remove the obstacles
			Check the indoor fan speed	Replace the fan motor
		Excessively high air temp. to the indoor unit heat exchanger	Check whether or not the short-circuited air exists	Remove the cause of the short-circuited air
		Excessively charged refrigerant	Check the refrigerant quantity *1)	Correctly charge the refrigerant
		Non-condensate gas in ref. cycle	Check the refrigerant quantity *1)	Recharge the refrigerant after the vacuum pumping
		Clogging of the discharge pr. piping	Check for clogging	Remove the clogging
	Malfunction or internal leakage of the 4-way valve		Check the temp. difference at the inlet and the outlet of the 4-way valve	Replace the 4-way valve
	Malfunction of the check valve of the outdoor unit		Check the temp. difference at the inlet and the outlet of the check valve	Replace the check valve
	Excessively high suction pressure	Failure of the bypass solenoid valve	Check for leakage of the solenoid valve	Replace the solenoid valve
		Malfunction or internal leakage of 4-way valve	Check the temp. difference at the inlet and the outlet of the 4-way valve	Replace the 4-way valve
	Discharge temp. of the indoor unit is unstable		Check the expansion valve of the indoor unit in the same system	Replace the failed expansion valve of the indoor unit

*1): Refer to chapter 7 of TC.

Все каталоги и инструкции здесь: https://splitsystema48.ru/instrukcii-po-ekspluatacii-kondicionerov.html

Abnormal operation of the devices (Cont.)

Phenomenon	Cause		Check item	Action (Turn OFF the main switch)
Cooling or heating process with an abnormal sound	Foreign particles inside of the fan casing		Visually inspect it	Remove the foreign particles
	Indoor unit fan runner is hitting the casing		Visually inspect it	Adjust the position of the fan runner
	Outdoor unit propeller fan is hitting the shroud		Visually inspect it	Adjust the position of the propeller fan
	Abnormal sound from the compressor	Faulty Installation	Check that each part is tightly fixed	Tightly fix each part
		Liquid ref. compression	Check expansion valve opening	Ensure superheat
		Wear or breakage of the internal comp. parts	Abnormal Sound from the Inside of the Compressor	Replace the compressor
		No heating by the oil heater	Check the Resistance (Oil Heater, Fuse)	Replace the oil heater or the fuse
	Humming sound from the magnetic conductor		Check the surface of the contacts	Replace the magnetic switch
	Abnormal vibration of the cabinets		Check each fixing screw	Tightly fix each screw
Outdoor fan does not operate when the compressor operates	Obstacle at the outdoor fan		Check the obstacles	Remove the obstacles
	Watching condition for the heating process		Wait for the switching of the 4-Way Valve (1 ~ 3 minutes)	If the 4-Way Valve does not switch, check for insufficient refrigerant
Indoor fan does not operate when the compressor operates	Discharge pressure does not increase higher than 1.5 MPa due to the insufficient refrigerant		Check the operation pressure *1)	Add the refrigerant
	Disconnected Wiring for the Indoor Fan		Check the wiring	Connect the wiring correctly
	Failure of AC chopper		Check AC chopper	Replace AC chopper

*1): Refer to chapter 10 of TC.

Все каталоги и инструкции здесь: https://splitsystema48.ru/instrukcii-po-ekspluatacii-kondicionerov.html

7.2. Troubleshooting procedure

7.2.1. Alarm code indication of remote control switch

If the RUN LED flickers for 2 seconds, there is a failure in the transmission between the Indoor Unit and the Remote Control Switch.

Possible causes are:
- Broken remote cable
- Contact failure in the remote control cable
- Defective IC or defective microcomputer

In any case, ask your retailer for service

If the RUN LED flickers 5 times (5 seconds) with the unit number and the alarm code displayed, make a note of the alarm code (refer to the table below) and ask your retailer for service.

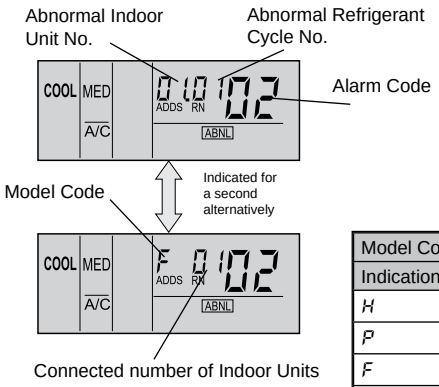

Model Code	
Indication	Model
H	Heat Pump
P	Inverter
F	Multi
C	Cooling Only
E	Others
L	KPI

■ **Alarm code table**

Code No.	Category	Content of Abnormality	Leading Cause
01	Indoor Unit	Tripping of Protection Device	Failure of Fan Motor, Drain Discharge, PCB, Relay.
02	Outdoor Unit	Tripping of Protection Device	Activation of PSH
03	Transmission	Abnormality between Indoor (or Outdoor) and Outdoor (or Indoor)	Incorrect Wiring. Failure of PCB. Tripping of Fuse. Power Supply OFF
04		Abnormality between Inverter PCB and Outdoor PCB. Abnormality between Fan Controller and Outdoor PCB	Transmission Failure (Loose Connector), If only fan controller is failed, indications are as follows: Number 1 Fan Controller Failure - F1 04 Number 2 Fan Controller Failure - F2 04
05	Supply phase	Abnormality of Power Source Wiring	Reverse Phase Incorrect Wiring.
06	Voltage	Abnormal Inverter Voltage	Outdoor Voltage Drop, Insufficient Power Capacity, If voltage drop cause by fan controller is detected, indications are as follows: No. 1 Fan Controller Failure - F1 06 No. 2 Fan Controller Failure - F2 06
07	Cycle	Decrease in Discharge Gas Superheat	Excessive Refrigerant Charge. Expansion Valve Open Lock.
08		Increase in Discharge Gas Temperature	Insufficient Refrigerant. Ref. Leakage, Clogging or Expansion Valve Close Lock
09	Fan motor	Activation of Protection Device for Outdoor Fan	Fan Motor Overheat, Locking
11	Sensor on Indoor Unit	Inlet Air Thermistor	Incorrect Wiring, Disconnecting Wiring.
12		Outlet Air Thermistor	
13		Freeze Protection Thermistor	
14		Gas Piping Thermistor	
16	Thermistor	Remote thermistor	
17		Built-in thermistor at remote control switch	
19	Fan motor	Tripping of Protection Device for Fan Motor	Failure of Fan Motor
21	Sensor on Outdoor Unit	High Pressure Sensor	Incorrect Wiring, Disconnecting Wiring
22		Outdoor Air Thermistor	
23		Discharge Gas Thermistor on Comp.	
24		Evaporating Thermistor	
29		Low Pressure Sensor	
31	System	Incorrect Setting of Outdoor and Indoor Unit	Incorrect Setting of Capacity Code.
35		Incorrect Setting in Indoor Unit No.	Existence of the same Indoor Unit No. in the same Refrigerant Cycle
38		Abnormality of Protective Circuit in Outdoor Unit	Failure of Indoor Unit PCB. Incorrect wiring. Connection to PCB in Indoor Unit.

Все каталоги и инструкции здесь: https://splitsystema48.ru/instrukcii-po-ekspluatacii-kondicionerov.html

Code No.	Category	Content of Abnormality	Leading Cause
39	Compressor	Abnormality of Running Current at Constant Compressor	Overcurrent, Blown Fuse of Failure of Current Sensor.
43	Protection device	Pressure Ratio Decrease Protection Activating	Failure of Compressor, Inverter
44		Low Pressure Increase Protection Activating	Overload to Indoor in Cooling. High Temperature of Outdoor Air In Heating Expansion Valve Open Lock
45		High Pressure Increase Protection Activating	Overload Operation. Excessive Refrigerant. Clogging of Heat Exchanger
47		Low Pressure Decrease Protection Activating	Insufficient refrigerant .
48		Activation of inverter overcurrent protection device	Overload operation, compressor failure
51	Sensor	Abnormal Current Sensor	Current sensor failure
53	Inverter	Inverter Error Signal Detection	Driver IC Error Signal Detection (Protection for Overcurrent, Low Voltage, Short-Circuit)
54		Increase in Inverter Fin Temperature	Abnormal Inverter Fin Thermistor. Abnormal Outdoor Fan
55		Inverter failure	Inverter PCB failure
56	Outdoor fan	Abnormal detection of fan motor position	Abnormal of fan motor position detection circuit, disconnected wiring No. 1 Fan controller failure - F1 56 No. 2 Fan controller failure - F2 56
57	Fan controller	Activation of fan controller protection	Driver IC error signal detection, fin temp. increase No. 1 Fan controller failure - F1 57 No. 2 Fan controller failure - F2 57
58		Abnormal fan controller	Abnormal operating speed No. 1 Fan controller failure - F1 58 No. 2 Fan controller failure - F2 58
EE	Inverter	Compressor Protection	3 Time Occurrence of Alarm Giving Damage to Compressor within 6 hours
b1	Outddor unit number setting	Incorrect outdoor unit number setting	Over 64 No. is set for address of refriogerant cycle
b5	Indoor unit number setting	Incorrect indoor unit number setting	More than 17 non-corresponding to H-LINKII units are connected to one system

Все каталоги и инструкции здесь: https://splitsystema48.ru/instrukcii-po-ekspluatacii-kondicionerov.html

7.2.2. Troubleshooting by alarm code

Alarm code	Description
01	**Activation of the safety device in the indoor unit**

- The RUN LED flickers and "ALARM" is displayed on the remote control switch.
- The unit number, the alarm code and the unit code are alternately displayed on the set temperature section.
  The unit number and the alarm code are displayed on the display of the outdoor unit PCB.
  – This alarm code is displayed when the contact between #1 and #2 of CN14 is not closed over 120 seconds during the cooling process, the heating process or the fan operation.

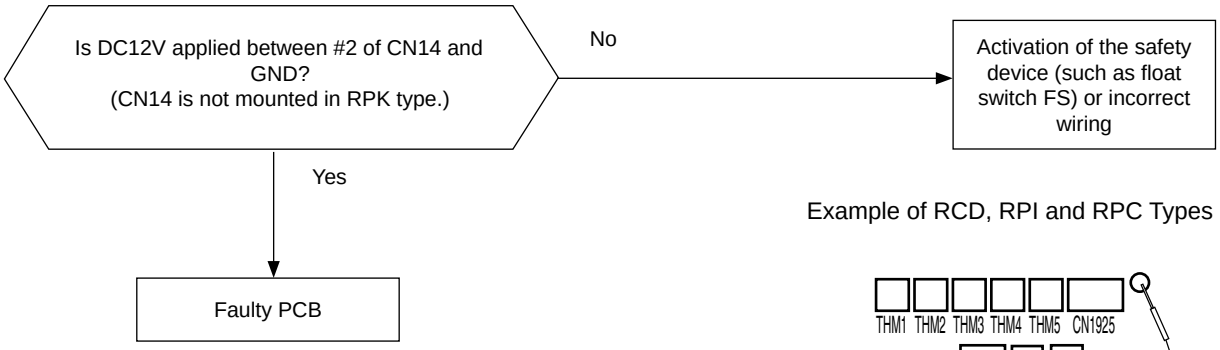

Example of RCD, RPI and RPC Types

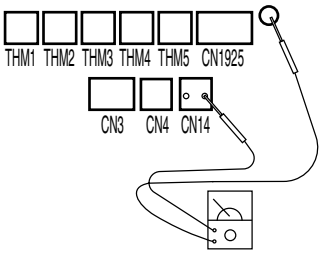

Phenomenon	Cause		Check item	Action (Turn OFF the main switch)
Activation of the float switch	High Drain Level	Clogging of the drainage	Check the drain pan	Remove the clogged foreign particles
	Faulty float switch	Fault	Check the continuity when the drain level is low	Replace the float switch if faulty
		Faulty contacting	Measure the resistance by means of the tester	Fix the looseness and Replace the connector
		Faulty connection	Check the connections	Repair the connection
Faulty indoor unit PCB			Check PCB by self checking	Replace PCB if faulty

Outdoor unit PCB display indication:

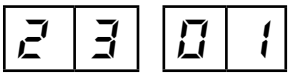

Indor unit number for failure — Alarm code

Все каталоги и инструкции здесь: https://splitsystema48.ru/instrukcii-po-ekspluatacii-kondicionerov.html

Alarm code	Description
02	**Activation of the safety device in the outdoor unit**

- The RUN LED flickers and “ALARM” is displayed on the remote control switch.
- The unit number, the alarm code and the unit code are alternately displayed on the set temperature section. The unit number and the alarm code are indicated on the display of the outdoor unit PCB1.
  - This alarm is indicated when one of safety devices is activated during compressor running..

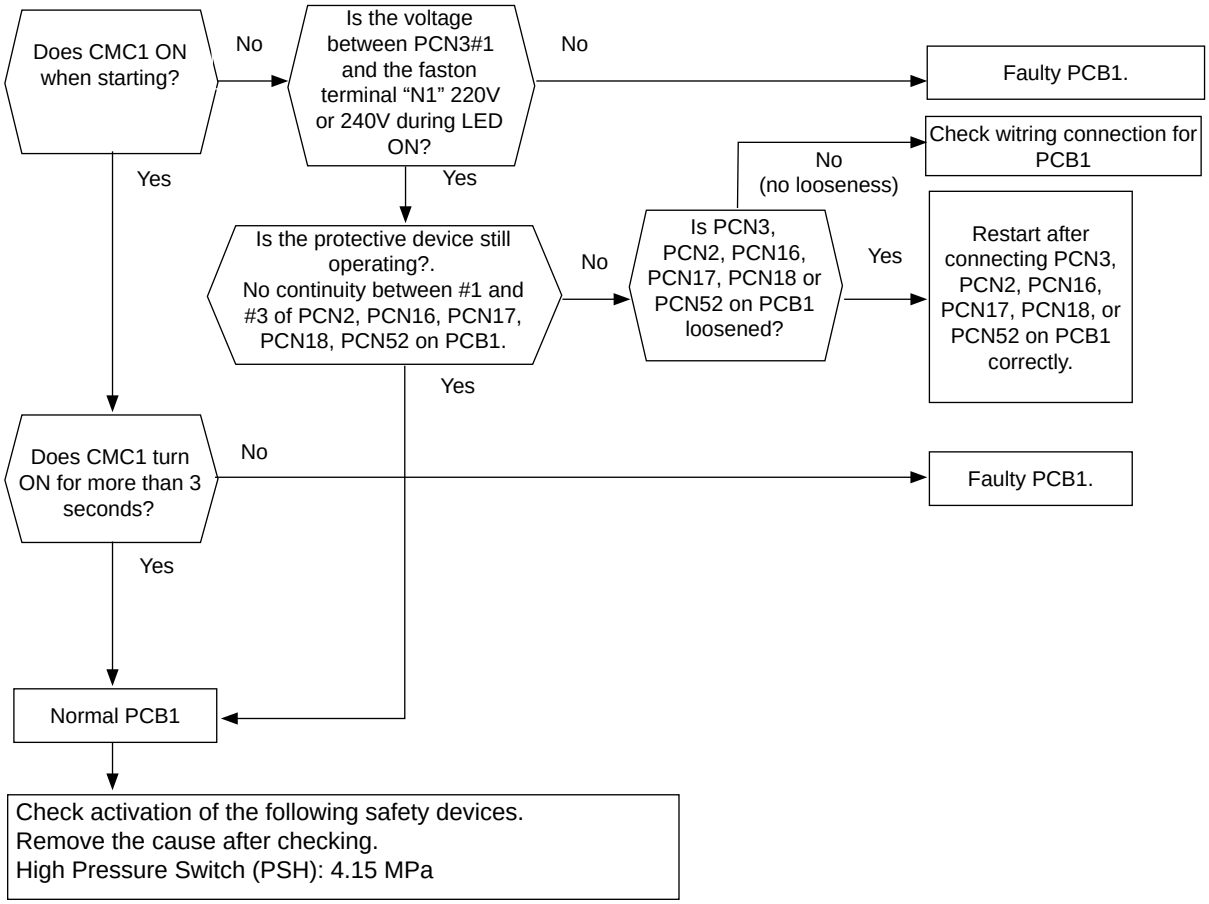

Outdoor Unit PCB1 Display Indication

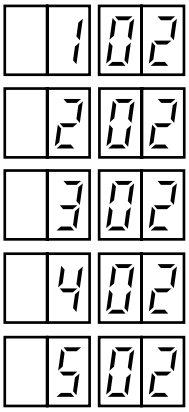

Abnormality of PSH1
Abnormality of PSH2
Abnormality of PSH3
Abnormality of PSH4
Abnormality of PSH5

Model	High Pressure Switch/( ): Connector No.				
	PSH1 (PCN2)	PSH2 (PCN16)	PSH3 (PCN17)	PSH4 (PCN18)	PSH5 (PCN52)
RAS-8 to 12FSN2	○	-	-	-	-
RAS-14 and 16FSN2	○	○	-	-	-
RAS-18 to 28FSN2	○	○	○	-	-
RAS-30 to 36FSN2	○	○	○	○	-
RAS-38 to 48FSN2	○	○	○	○	○

Все каталоги и инструкции здесь: https://splitsystema48.ru/instrukcii-po-ekspluatacii-kondicionerov.html

Phenomenon	Cause		Check item	Action (Turn OFF the main switch)
Activation of the high-pressure switch due to the excessively high discharge pressure	Insufficient air flow to the heat exchanger (Outdoor heat exchanger during the cooling process or indoor heat exchanger during the heating process)		Check the heat exchanger for dust or for clogging	Remove the dust or the clogging
			Check the air filter for dust	Remove the dust
			Check for any obstacles at the inlet or the outlet of the heat exchanger	Remove the obstacles
			Check the service area	Secure service area
			Check the speed (Outdoor Fan: Cooling / Indoor Fan: Heating)	Replace the fan motor if faulty
	Malfunction of the expansion valve		Disconnected of the Connector	Fix the looseness or reconnect the connector
			Fully closed and locked	Replace the expansion valve
	Excessively high temp. air to the Indoor Unit		Calculate the heat load	Reduce the heat load or use a bigger unit
			Check for hot air near the ceiling (Heating)	Provide good circulation
			Check for short-circuited air (Heating)	Remove the short-circuited air
			Check for other heat source	Remove the heat source
	Faulty high-pressure switch	Faulty pressure switch	Measure the discharge pressure. Check the continuity after the decrease of the pressure	Replace the pressure switch if faulty
		Insufficient contacting	Measure the resistance by means of the tester	Fix the looseness. Replace the connector
		Incorrect connection	Check the connections	Repair the connections

Все каталоги и инструкции здесь: https://splitsystema48.ru/instrukcii-po-ekspluatacii-kondicionerov.html

Phenomenon	Cause	Check item	Action (Turn OFF the main switch)
Activation of the high-pressure switch due to the excessively high discharge pressure	Faulty or malfunction of the expansion valve	Check for clogging	Remove the clogging
		Check the connect wiring and the connectors	Replace the connector
		Check the operation sound from the coil	Replace the coil
		Check the discharge gas thermistor	Replace the thermistor
		Check the attaching state of the discharge gas thermistor	Reattach the thermistor
	Faulty gas bypass solenoid valve	Check for clogging	Replace the gas bypass solenoid valve
	Overcharged refrigerant	Check the cycle operation temp.	Charge the refrigerant correctly
	Mixture of the non-condensate gas in the refrigerant cycle	Check the air temp. and the pressure	Recharge the refrigerant after the vacuum pumping
	Clogging of the discharge piping	Check for clogging	Remove the clogging
	Liquid line stop valve or gas line stop valve is not in operation	Check the stop valves	Fully Open the stop valves
	Clogging of the check valve	Check for clogging	Replace the check valve

Все каталоги и инструкции здесь: https://splitsystema48.ru/instrukcii-po-ekspluatacii-kondicionerov.html

Alarm code	Description
03	**Abnormal transmission between the indoor units and the outdoor unit**

- The RUN LED flickers and "ALARM" is displayed on the remote control switch.
- The unit number, the alarm code and the unit code are alternately displayed on the set temperature section.
  The unit number and the alarm code are displayed on the display of the outdoor unit PCB1.
  - This alarm is displayed when an abnormal operation is maintained for three minutes after the normal transmission between the indoor units and the outdoor unit. Also, an abnormal operation is maintained for 30 seconds after the micro-computer is automatically reset.
    The alarm is displayed when the abnormal transmission is maintained for 30 seconds from the starting of the outdoor unit.
  - Investigate the cause of the overcurrent and take the necessary action when the fuses are blown out or the breaker for the outdoor unit is activated.

PCB1: Outdoor unit printed circuit board
PCB: Indoor unit printed circuit board

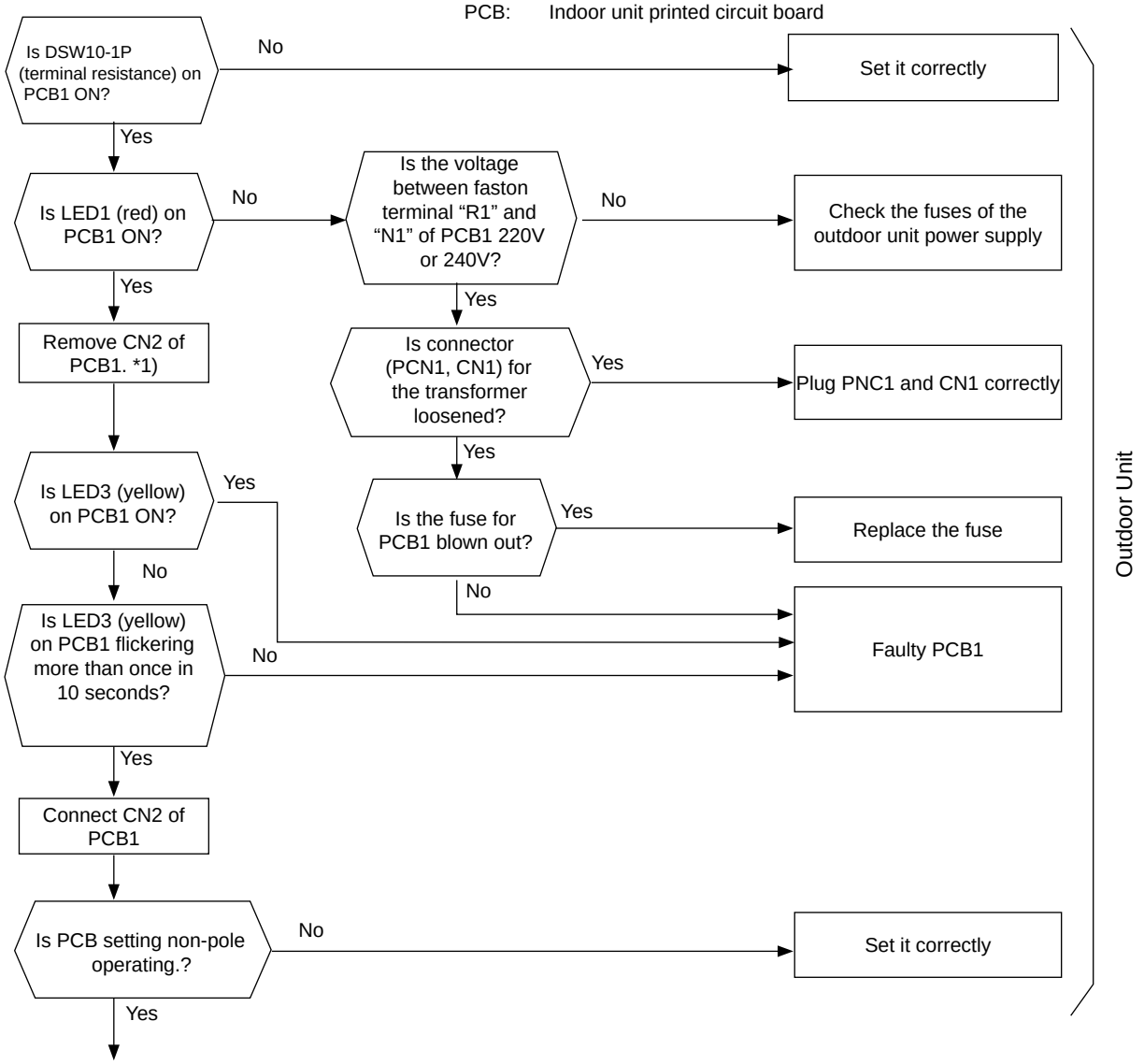

To next page

Все каталоги и инструкции здесь: https://splitsystema48.ru/instrukcii-po-ekspluatacii-kondicionerov.html

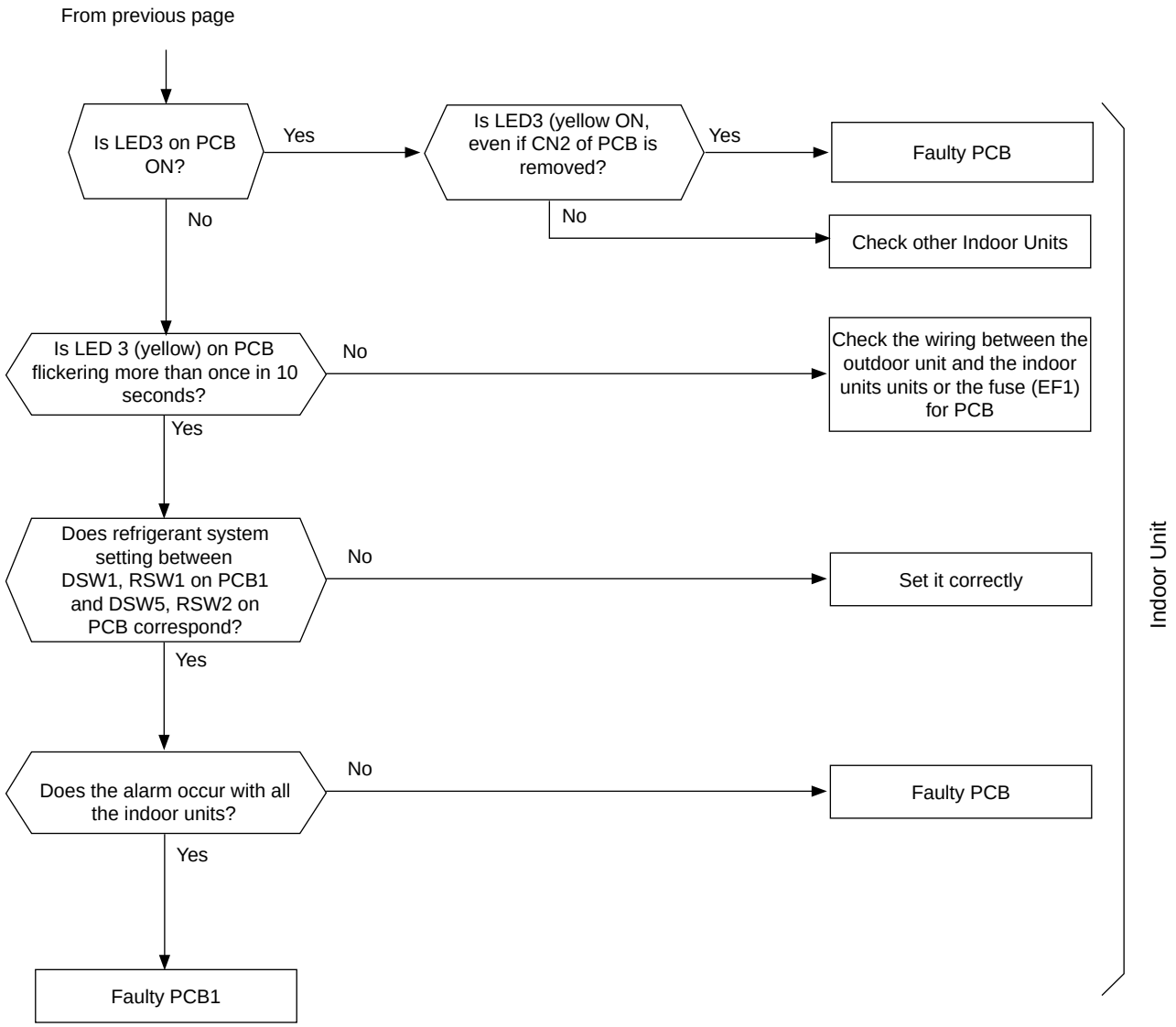

*1): In case that terminal resistance (DSW10-1P) is OFF when H-Link Connection is performed.

Set the terminal resistance to ON when CN2 is removed.

Set the terminal resistance to OFF when CN2 is reconnected.

Все каталоги и инструкции здесь: https://splitsystema48.ru/instrukcii-po-ekspluatacii-kondicionerov.html

Phenomenon	Cause	Check item	Action (Turn OFF the main switch)
Power failure or no power supply		Measure the voltage by means of the tester	Supply the power
Blown out fuse for the power source or activation of the outdoor unit breaker	Short circuit between wires	Check the insulation material for breaks	Remove the short circuit and replace the fuse
	Short-circuited wire to ground	Measure the insulation resistance	Remove the short circuit to ground and replace the fuse
	Faulty comp. motor	Measure the resistance between the wires and the insulation resistance	Replace the comp. and the fuse
	Faulty outdoor unit fan motor	Measure the resistance between the wires and the insulation resistance	Replace the outdoor unit fan motor and the fuse
Blown out fuse for control circuit or activation of outdoor unit breaker	Short circuit between wires	Check the insulation material for breaks	Remove the short circuit and replace the fuse
	Short circuit of the control circuit (to ground)	Measure the insulation resistance	Remove the short circuit and replace the fuse
	Faulty solenoid coil for the magnetic switch for the comp. motor	Measure the resistance of coil	Replace the magnetic switch and the fuse
	Failure of the outdoor unit fan motor	Measure the resistance between the wires and the insulation resistance	Replace the outdoor unit fan motor and fuse
PCB1 power circuit failure		Measure PCB1 output voltage *2)	Replace PCB1
Disconnected wires insufficient contacting or incorrect connection	Between outdoor unit and indoor unit	Check the continuity of the wires. Check for looseness of the connection screws. Check the terminal Nos.	Replacing wires repairing and tightening the screws and the correct wiring
	Power source wiring for the outdoor unit		
Faulty PCB (outdoor unit, indoor unit)	Disconnected wires to PCB	Check the connections	Correctly connect the wires
	Faulty PCB	–	Replace PCB if faulty
Incorrect wiring	Disconnected wire; insufficient contacting	Check the continuity and the looseness of connection screws	Replacing wires, repairing and tightening the screws
	Incorrect wiring	Check the terminal Nos.	Correctly connect the wires

*2): VCC12~GND2: 12VDC
VCC05~GND1: 5VDC
VCC12~GND1: 12VDC
VCC15~GND1: 15VDC
VCC24~GND1: 24VDC
VCC12T~GND1: 12VDC

Все каталоги и инструкции здесь: https://splitsystema48.ru/instrukcii-po-ekspluatacii-kondicionerov.html

Alarm code	Description
04	**Abnormal transmission between Inverter and the Outdoor Unit PCB1, 2**

- The RUN LED flickers and “ALARM” is displayed on the remote control switch.
- The unit number, the alarm code and the unit code are alternately displayed on the set temperature section. The unit number and the alarm code are displayed on the display of the outdoor unit PCB1.
  - This alarm is displayed when the abnormal operation is maintained for 30 seconds after the normal transmission between the outdoor unit PCB1 and PCB2 and also abnormality is maintained for 30 seconds after the micro-computer is automatically reset. The alarm is displayed when the abnormal transmission is maintained for 30 seconds from the starting of the outdoor unit.
  - Alarm code “04.” is indicated when transmission between inverter and fan controller is abnormal.

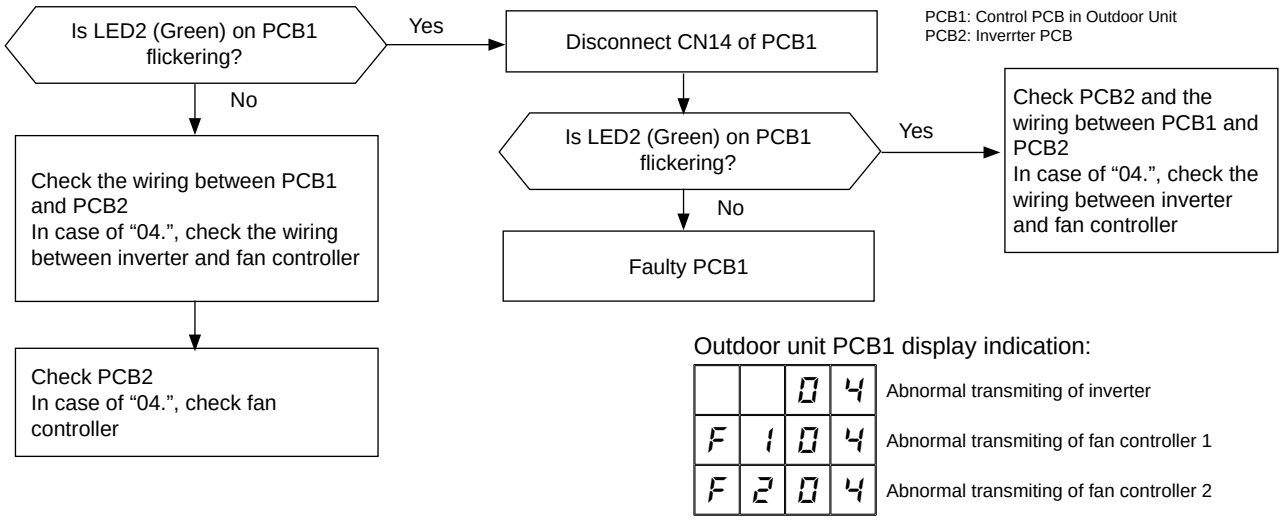

Outdoor unit PCB1 display indication:

04	Abnormal transmiting of inverter
F104	Abnormal transmiting of fan controller 1
F204	Abnormal transmiting of fan controller 2

Phenomenon	Cause	Check item	Action (Turn OFF the main switch)
Disconnected wires, insufficient contacting or incorrect connection	Between control PCB1, PCB2 and fan controller	Check the continuity of wires. Check for looseness of the connection screws. Check the connection No.	Replacing wires, repairing, tightening screws and incorrect wiring
	Power source wiring for the outdoor unit		
Faulty PCB (PCB1 and PCB2)	Disconnected wires to PCB	Check the connections	Repair the wiring connections
	Faulty PCB	–	Replace PCB if faulty
Incorrect wiring	Disconnected wires; insufficient contacting	Check the continuity. Check for looseness of connection screws	Replacing wires, repairing, tightening screws
	Incorrect wiring	Check the connection Nos.	Correctly connect the wires

Position of Surge Absorber (SA)

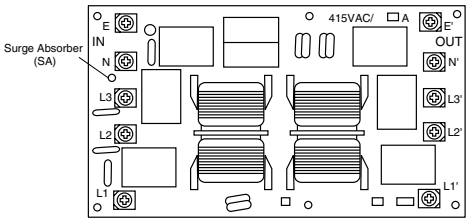

(380-415V)

When the unit is applied the excessive surge current due to lighting or other causes, it is indicated this alarm code “04” or the inverter stoppage code (ITC) “11” and the unit can not be operated. In this case, check to ensure the surge absorber (SA) on the noise filter (NF1). If the inside of the surge absorber is normal, turn OFF the power once and wait for PCB2’s LED OFF and turn ON again.

Все каталоги и инструкции здесь: https://splitsystema48.ru/instrukcii-po-ekspluatacii-kondicionerov.html

Alarm code	Description
05	**Abnormality of picking up phase signal**

- The RUN LED flickers and “ALARM” is displayed on the remote control switch.
- The unit number, the alarm code and the unit code are alternately displayed on the set temperature section. The unit number and the alarm code are displayed on the display of the outdoor unit PCB1.
  – This alarm is displayed when the main power source phase is reversely connected or one phase is not connected.

PCB1: Outdoor unit printed circuit board

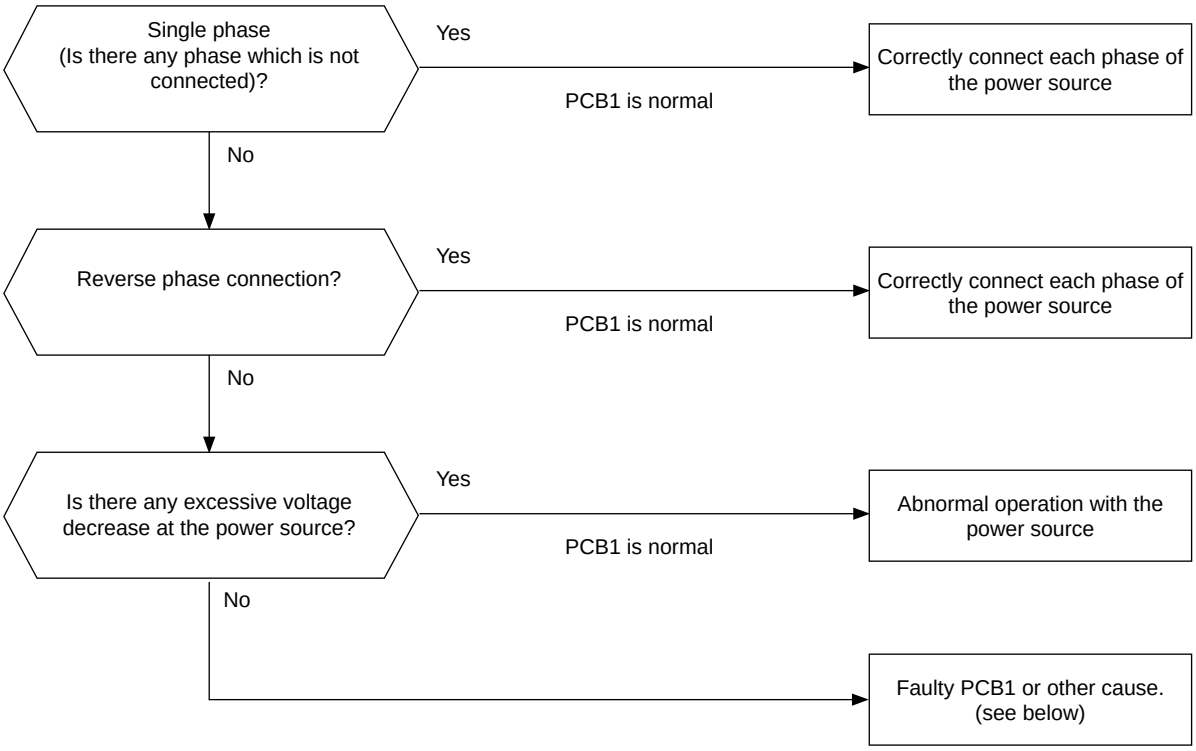

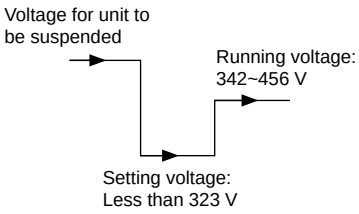

Phenomenon	Cause	Check item	Action (Turn OFF the main switch)
Activation of reverse phase sensor in the outdoor unit	Reverse or single phase	Check it according to the electrical wiring	Replacing wires, repair, tightening screws or correct wiring
	Faulty outdoor unit PCB1	–	Replace PCB if faulty

Все каталоги и инструкции здесь: https://splitsystema48.ru/instrukcii-po-ekspluatacii-kondicionerov.html

Alarm code	Description
06	**Excessively low or high voltage for the inverter**

- The RUN LED flickers and "ALARM" is displayed on the remote control switch.
- The unit number, the alarm code and the unit code are alternately displayed on the set temperature section. The alarm code is displayed on the display of the outdoor unit PCB1.
  - This alarm code is displayed when the voltage between terminal “P” and “N” of transistor module (IPM) is insufficient and the alarm has three occurrences in 30 minutes. In the case that the occurrence is smaller than two times, retry is performed. “06.” indicates faulty fan controller.

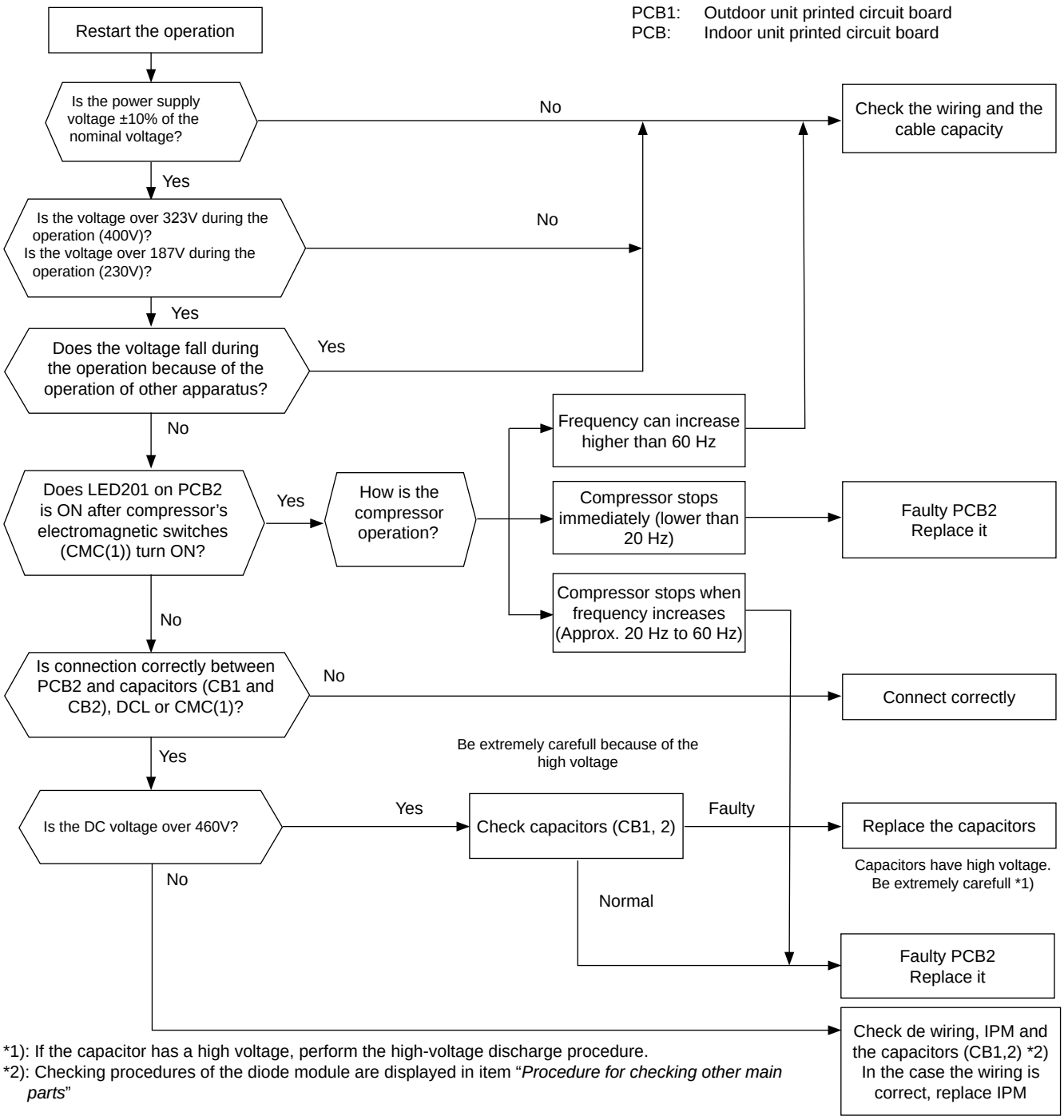

*1): If the capacitor has a high voltage, perform the high-voltage discharge procedure.
*2): Checking procedures of the diode module are displayed in item “*Procedure for checking other main parts*”

Все каталоги и инструкции здесь: https://splitsystema48.ru/instrukcii-po-ekspluatacii-kondicionerov.html

Alarm code	Description
06.	**Excessively low or high voltage for fan module**

- The RUN LED flickers and "ALARM" is displayed on the remote control switch.
- The unit number, the alarm code and the unit code are alternately displayed on the set temperature section.
  The unit number and the alarm code are displayed on the display of the outdoor unit PCB1.
  – This alarm code is displayed when the voltage between terminal “P” and “N” of Fan Module is insufficient and the alarm has three occurrences in 30 minutes. If the number of occurrences is smaller than two times, the retry operation is performed.

PCB1: Outdoor unit printed circuit board

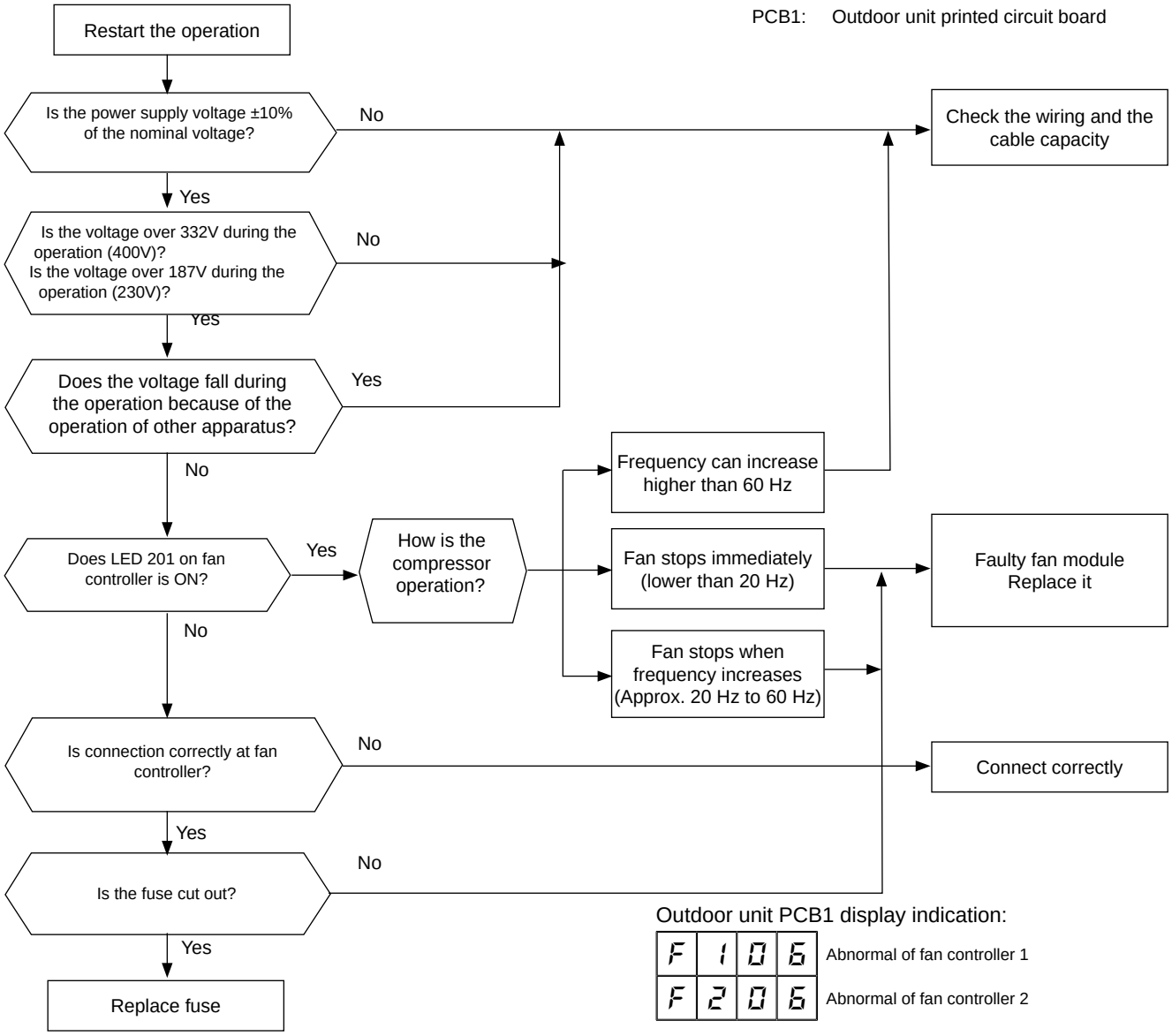

Outdoor unit PCB1 display indication:

F106	Abnormal of fan controller 1
F206	Abnormal of fan controller 2

*1): If the capacitor has a high voltage, perform the high-voltage discharge procedure.
*2): Check the wiring connection according to the checking procedure of fan controller

Все каталоги и инструкции здесь: https://splitsystema48.ru/instrukcii-po-ekspluatacii-kondicionerov.html

Alarm code	Description
07	**Decrease of discharge gas superheat**

- The RUN LED flickers and “ALARM” is displayed on the remote control switch.
- The unit number, the alarm code and the unit code are alternately displayed on the set temperature section. The unit number and the alarm code are displayed on the display of the outdoor unit PCB.
  - If the discharge gas superheat is below 10 °C at the top of the compressor for 30 minutes, the retry operation is performed. However, if the alarm occurs twice in addition to the first occurrence within two hours, this alarm code is displayed.

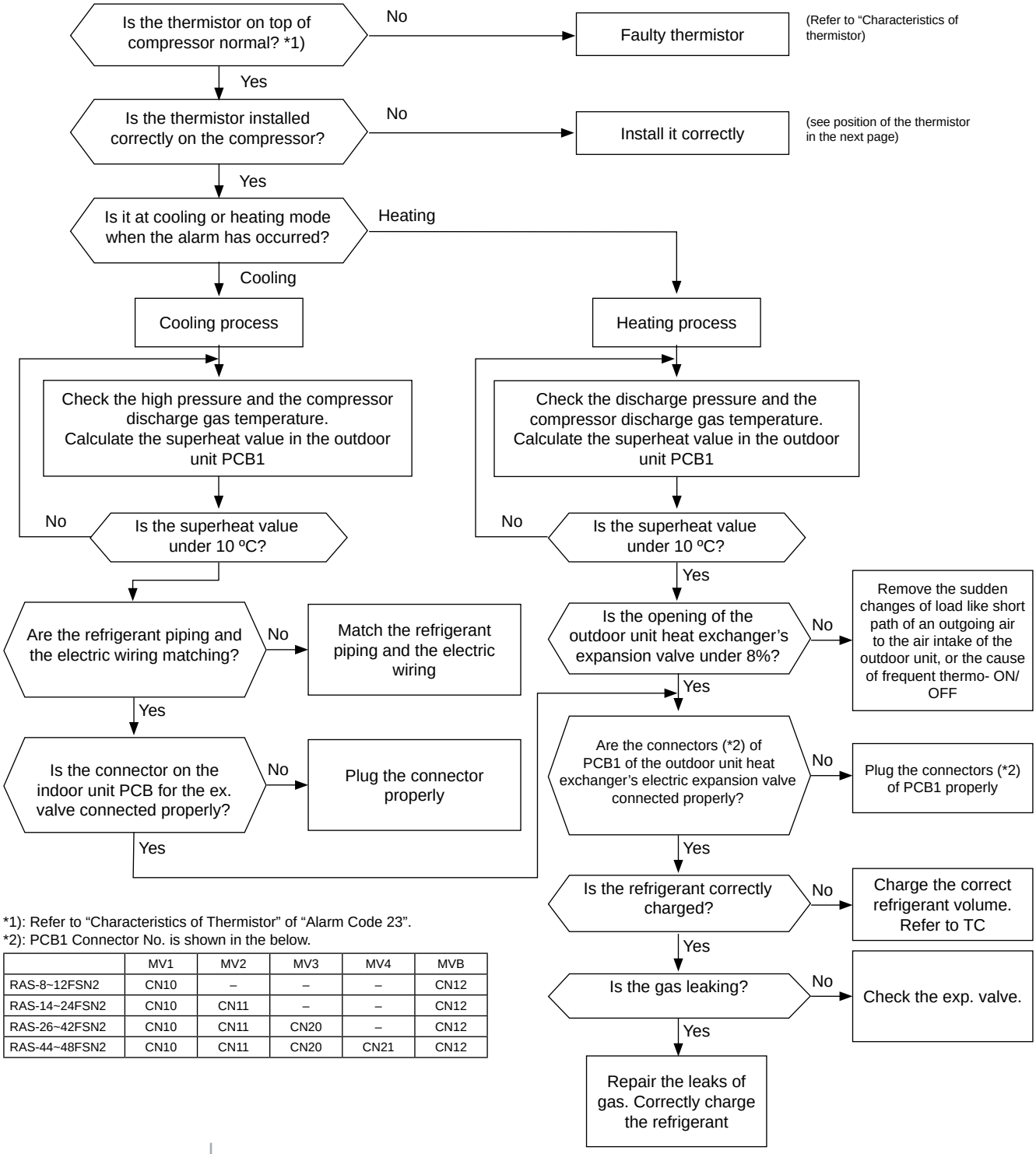

*1): Refer to “Characteristics of Thermistor” of “Alarm Code 23”.
*2): PCB1 Connector No. is shown in the below.

	MV1	MV2	MV3	MV4	MVB
RAS-8~12FSN2	CN10	–	–	–	CN12
RAS-14~24FSN2	CN10	CN11	–	–	CN12
RAS-26~42FSN2	CN10	CN11	CN20	–	CN12
RAS-44~48FSN2	CN10	CN11	CN20	CN21	CN12

Все каталоги и инструкции здесь: https://splitsystema48.ru/instrukcii-po-ekspluatacii-kondicionerov.html

■ Position of the Thermistor

Thermistor ref.	Display	Drive	Number of compressors	Unit HP	Thermistor position (a)
THM8	rd1	Inverter	1	8~12HP	
THM9	rd2	Constant speed	2	14~16HP	
THM12	rd3		3	18~28HP	
THM13	rd4		4	30~36HP	
THM18	rd5		5	38~48HP	

Phenomenon	Cause		Check item	Action (Turn OFF the main switch)
Decrease of the discharge gas superheat	Ref. cycle is different from the electrical system		Check the ref. cycle and the electrical system	Repair the wiring
	Overcharged refrigerant		Measure the pressure. (Refer to “Test Run of SM”.)	Correctly charge the refrigerant
	Faulty Ex. valve		Check expansion valve (refer to procedure of checking other main parts)	Replace the ex. valve if faulty
	Faulty PCB	Fault	Replace PCB1 and check the operation	Replace PCB if faulty
		Disconnected wires for the Ex. valve control	Check the connections	Repair the wiring connection
	Faulty discharge gas thermistor	Fault	Check thermistor	Replace the thermistor if faulty
		Incorrect mounting	Check the mounting state (Refer to Alarm code 07)	Correctly mount the thermistor
		Incorrect connection	Check the connections	Remove looseness. Replace the connector or repair the connections

Все каталоги и инструкции здесь: https://splitsystema48.ru/instrukcii-po-ekspluatacii-kondicionerov.html

Alarm code	Description
08	**Excessively high discharge gas temperature at the top of the compressor chamber**

- The RUN LED flickers and “ALARM” is displayed on the remote control switch.
- The unit number, the alarm code and the unit code are alternately displayed on the set temperature section. The unit number and the alarm code are displayed on the display of the outdoor unit PCB1.
  - This alarm is displayed when the following conditions occur three times within one hour:
    1) The temperature of the thermistor on the top of the compressor is maintained higher than 132 °C for 10 minutes.
    2) The temperature of the thermistor on the top of the compressor is maintained higher than 140 °C for 5 seconds.

PCB1: Outdoor unit printed circuit board

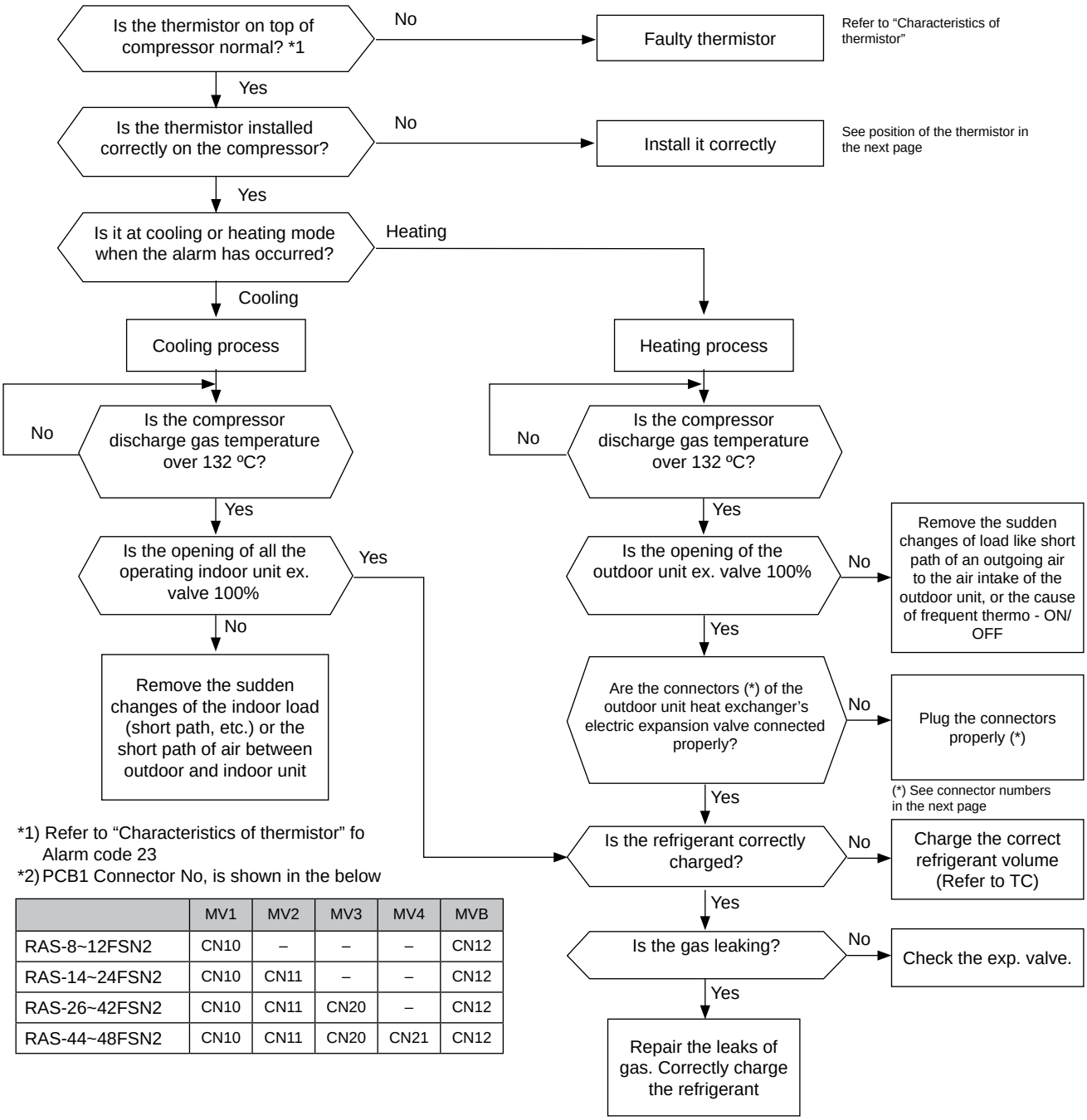

*1) Refer to “Characteristics of thermistor” fo Alarm code 23
*2) PCB1 Connector No, is shown in the below

	MV1	MV2	MV3	MV4	MVB
RAS-8~12FSN2	CN10	–	–	–	CN12
RAS-14~24FSN2	CN10	CN11	–	–	CN12
RAS-26~42FSN2	CN10	CN11	CN20	–	CN12
RAS-44~48FSN2	CN10	CN11	CN20	CN21	CN12

Все каталоги и инструкции здесь: https://splitsystema48.ru/instrukcii-po-ekspluatacii-kondicionerov.html

■ Position of the Thermistor

Thermistor ref.	Display	Drive	Number of compressors	Unit HP	Thermistor position (a)
THM8	rd1	Inverter	1	8~12HP	
THM9	rd2	Constant speed	2	14~16HP	
THM12	rd3		3	18~28HP	
THM13	rd4		4	30~36HP	
THM18	rd5		5	38~48HP	

Phenomenon	Cause		Check item	Action (Turn OFF the main switch)
Decrease of the discharge gas superheat	Ref. cycle is different from the electrical system		Check the ref. cycle and the electrical system	Repair the wiring
	Undercharged refrigerant		Check pressures	Correctly charge the refrigerant
	Faulty Ex. valve		Check expansion valve (refer to procedure of checking other main parts)	Replace the ex. valve if faulty
	Faulty PCB	Fault	Replace PCB and check the operation	Replace PCB if faulty
		Disconnected wires for the Ex. valve control	Check the connections	Repair the wiring connection
	Faulty discharge gas thermistor	Fault	Measure the resistance of thermistor	Replace the thermistor if faulty
		Incorrect mounting	Check the mounting state	Correctly mount the thermistor
		Incorrect connection	Check the connections	Remove looseness. Replace the connector or repair the connections

Все каталоги и инструкции здесь: https://splitsystema48.ru/instrukcii-po-ekspluatacii-kondicionerov.html

Alarm code	Description
09	**Activation of the protection device for the outdoor AC fan motor (RAS-26FSN2 to RAS-48FSN2 Only)**

- The RUN LED flickers and “ALARM” is displayed on the remote control switch.
- The unit number, the alarm code and the unit code are alternately displayed on the set temperature section. The unit number and the alarm code are displayed on the display of the outdoor unit PCB1.
  - This alarm code is displayed when the temperature of the internal thermostat (ITO2 for RAS-26 to 42FSN2) (ITO2 and ITO4 for RAS-44 to 48 FSN2) for the outdoor fan motor is higher than 130 °C.

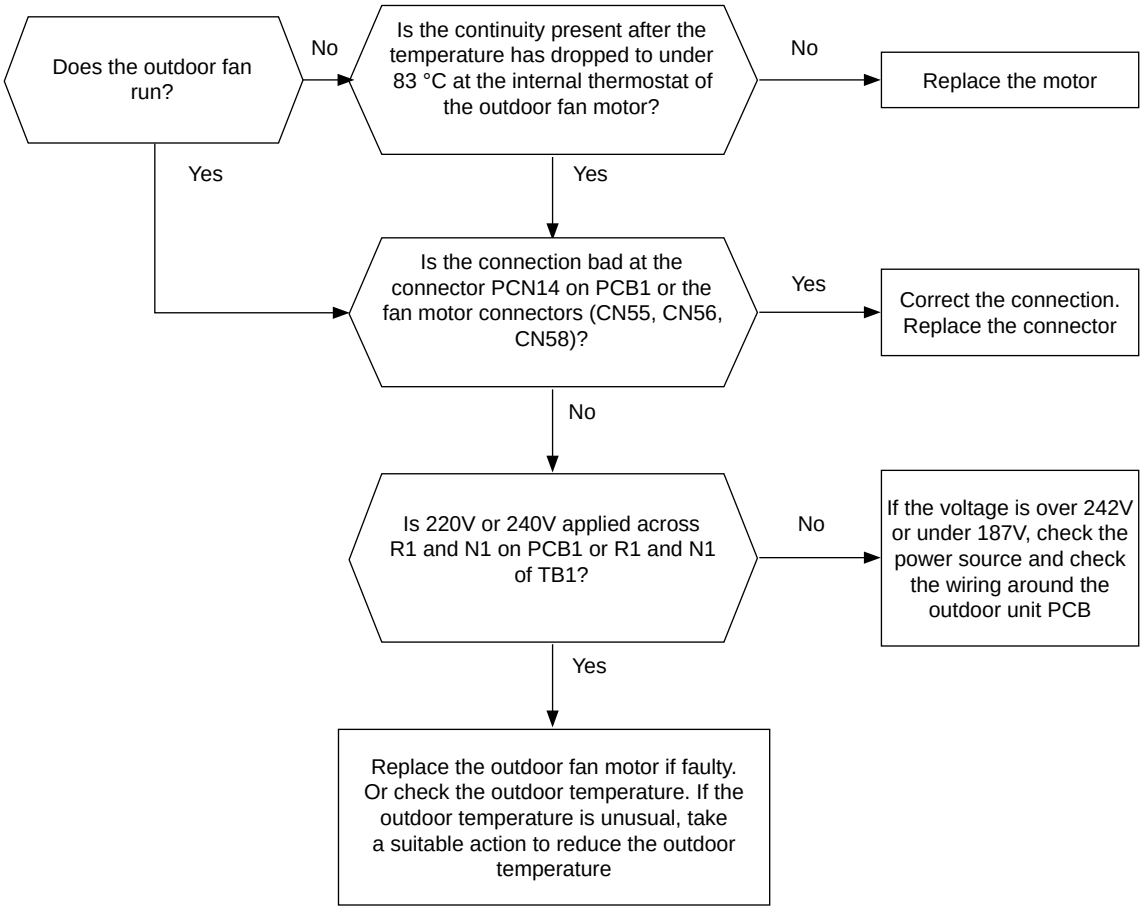

Phenomenon	Cause		Check item	Action (Turn OFF the main switch)
Activation of the internal thermostat for the outdoor unit fan motor	Faulty Outdoor Unit Fan Motor		Measure the coil resistance and the insulation resistance	Replace the motor if faulty
	Faulty internal thermostat	Fault	Check the continuity after the fan motor temperature decreases to the room temp.	Replace the fan motor if no continuity of the internal thermostat under 83 °C
		Insufficient contacting	Measure the resistance by means of the tester	Correct Looseness. Replace the connectors
		Incorrect connection	Check the connections	Repair the connections

Все каталоги и инструкции здесь: https://splitsystema48.ru/instrukcii-po-ekspluatacii-kondicionerov.html

Alarm code	Description
11	**Abnormal operation of thermistor for the indoor unit air inlet temperature (air inlet thermistor)**

- The RUN LED flickers and "ALARM" is displayed on the remote control switch.
- The unit number, the alarm code and the unit code are alternately displayed on the set temperature section.
  The unit number and the alarm code are displayed on the display of the outdoor unit PCB1.
  – This alarm code is displayed when the thermistor is short-circuited (less than 0.24 kΩ) or cut (greater than 840 kΩ) during the cooling process or the heating process. The system is automatically restarted when the fault is removed.

PCB1: Control PCB in Outdoor Unit
PCB: Indoor unit PCB

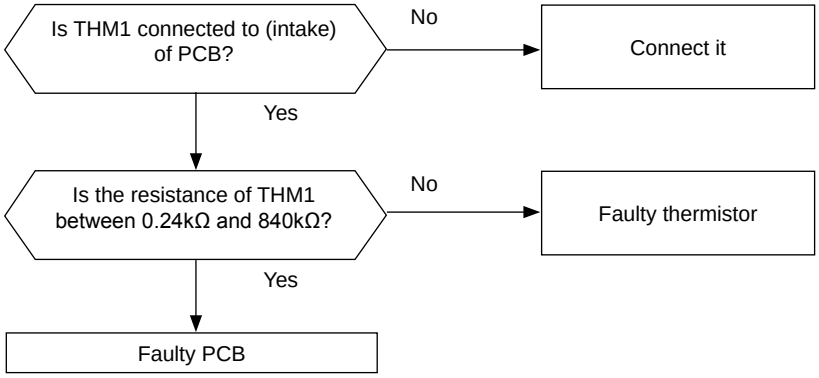

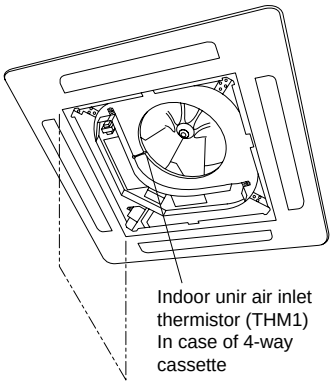

Phenomenon	Cause	Check item	Action (Turn OFF the main switch)
Faulty air inlet thermistor	Fault	Check the resistance	Replace the thermistor if faulty
	Incorrect connection	Check the connection	Repair the wiring and the connections
Faulty PCB		Replace PCB and check the operation	Replace PCB if faulty

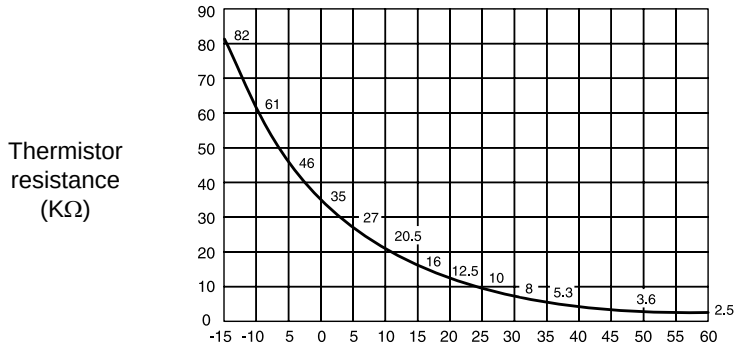

Thermistor characteristics

NOTE:
This data is applicable to the following thermistors:

1. *Indoor unit discharge air temperature,*
2. *Indoor unit liquid refrigerant temperature*
3. *Indoor unit air inlet temperature*
4. *Outdoor temperature*
5. *Outdoor unit evaporating temperature*
6. *Indoor unit gas piping*

Все каталоги и инструкции здесь: https://splitsystema48.ru/instrukcii-po-ekspluatacii-kondicionerov.html

Alarm code	Description
12	**Abnormal operation of the thermistor for the indoor discharge air temperature (air outlet thermistor)**

- The RUN LED flickers and "ALARM" is displayed on the remote control switch.
- The unit number, the alarm code and the unit code are alternately displayed on the set temperature section.
  The unit number and the alarm code are displayed on the display of the outdoor unit PCB1.
  – This alarm code is displayed when the thermistor is short-circuited (less than 0.24 kΩ) or cut (greater than 840 kΩ) during the cooling process or the heating process. The system is automatically restarted when the fault is removed.

PCB1: Control PCB in Outdoor Unit
PCB: Indoor unit PCB

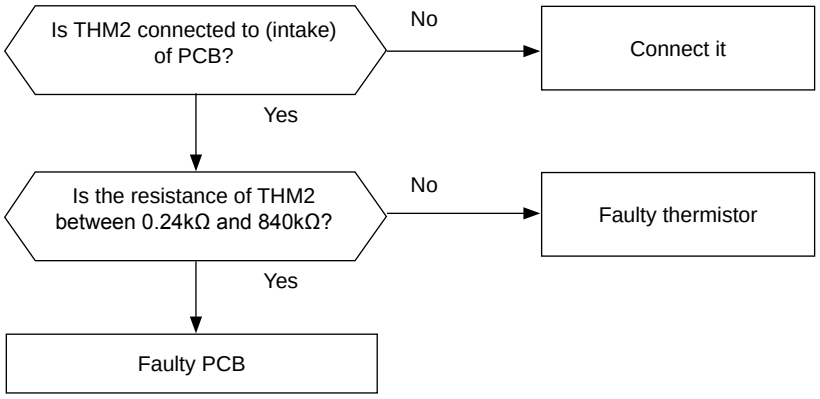

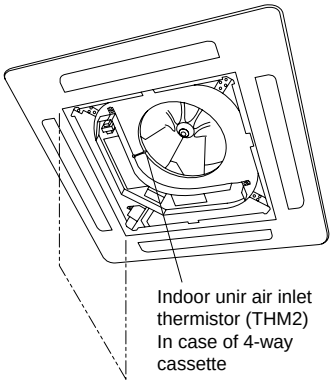

Refer to alarm code 11 for thermistor resistance

Phenomenon	Cause	Check item	Action (Turn OFF the main switch)
Faulty air outlet thermistor	Fault	Check the resistance	Replace the thermistor if faulty
	Incorrect connection	Check the connection	Repair the wiring and connections
Faulty PCB		Replace PCB and check the operation	Replace PCB if faulty

Все каталоги и инструкции здесь: https://splitsystema48.ru/instrukcii-po-ekspluatacii-kondicionerov.html

Alarm code	Description
13	**Abnormal operation of the thermistor for the indoor unit heat exchanger liquid refrigerant pipe temperature (freeze protection thermistor)**

- The RUN LED flickers and "ALARM" is displayed on the remote control switch.
- The unit number, the alarm code and the unit code are alternately displayed on the set temperature section.
  The unit number and the alarm code are displayed on the display of the outdoor unit PCB.
  – This alarm code is displayed when the thermistor is short-circuited (less than 0.24 kΩ) or cut (greater than 840 kΩ) during the cooling process or the heating process. The system is automatically restarted when the fault is removed.

PCB1: Control PCB in Outdoor Unit
PCB: Indoor unit PCB

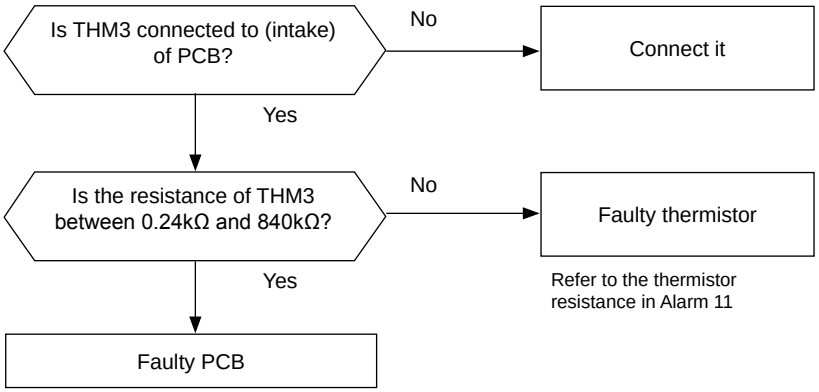

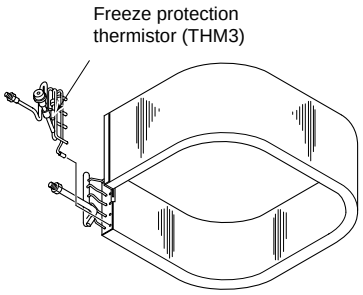

In case of 4-way cassette

Phenomenon	Cause	Check item	Action (Turn OFF the main switch)
Faulty freeze protection thermistor	Fault	Check the resistance	Replace the thermistor if faulty
	Incorrect connection	Check the wiring to PCB	Connect wiring correctly
Faulty PCB		Replace PCB and check the operation	Replace PCB if faulty

Все каталоги и инструкции здесь: https://splitsystema48.ru/instrukcii-po-ekspluatacii-kondicionerov.html

Alarm code	Description
14	**Abnormal operation of the thermistor for the indoor unit heat exchanger gas refrigerant pipe temperature (gas piping thermistor)**

- The RUN LED flickers and "ALARM" is displayed on the remote control switch.
- The unit number, the alarm code and the unit code are alternately displayed on the set temperature section.
  The unit number and the alarm code are displayed on the display of the outdoor unit PCB1.
  – This alarm code is displayed when the thermistor is short-circuited (less than 0.24 kΩ) or cut (greater than 840 kΩ) during the cooling process or the heating process. The system is automatically restarted when the fault is removed.

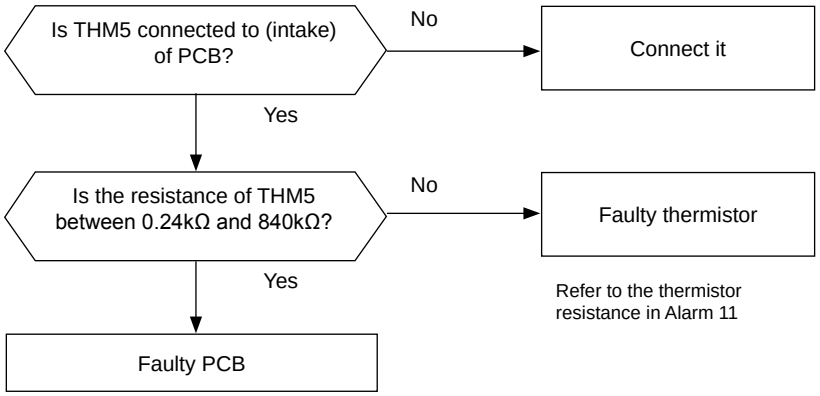

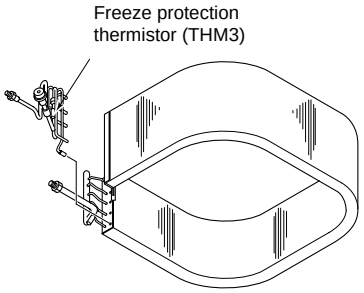

In case of 4-way cassette

Phenomenon	Cause	Check item	Action (Turn OFF the main switch)
Faulty gas piping thermistor	Fault	Check the resistance	Replace the thermistor if faulty
	Incorrect connection	Check the wiring to PCB	Connect wiring correctly
Faulty PCB		Replace PCB and check the operation	Replace PCB if faulty

Все каталоги и инструкции здесь: https://splitsystema48.ru/instrukcii-po-ekspluatacii-kondicionerov.html

Alarm code	Description
19	**Activation of the protection device for the indoor fan motor (RCI)**

- The RUN LED flickers and "ALARM" is displayed on the remote control switch.
- The unit number, the alarm code and the unit code are alternately displayed on the set temperature section, and the alarm code is indicated on the display of the outdoor unit PCB1.
  - This alarm code is indicated when the following condition occurs thre times in 30 minutes:
    Indoor fan rotates less than 70 rpm for 5 seconds during operation.

When the cause is checked by means of this flow chart, confirm that fan speed setting is Hi

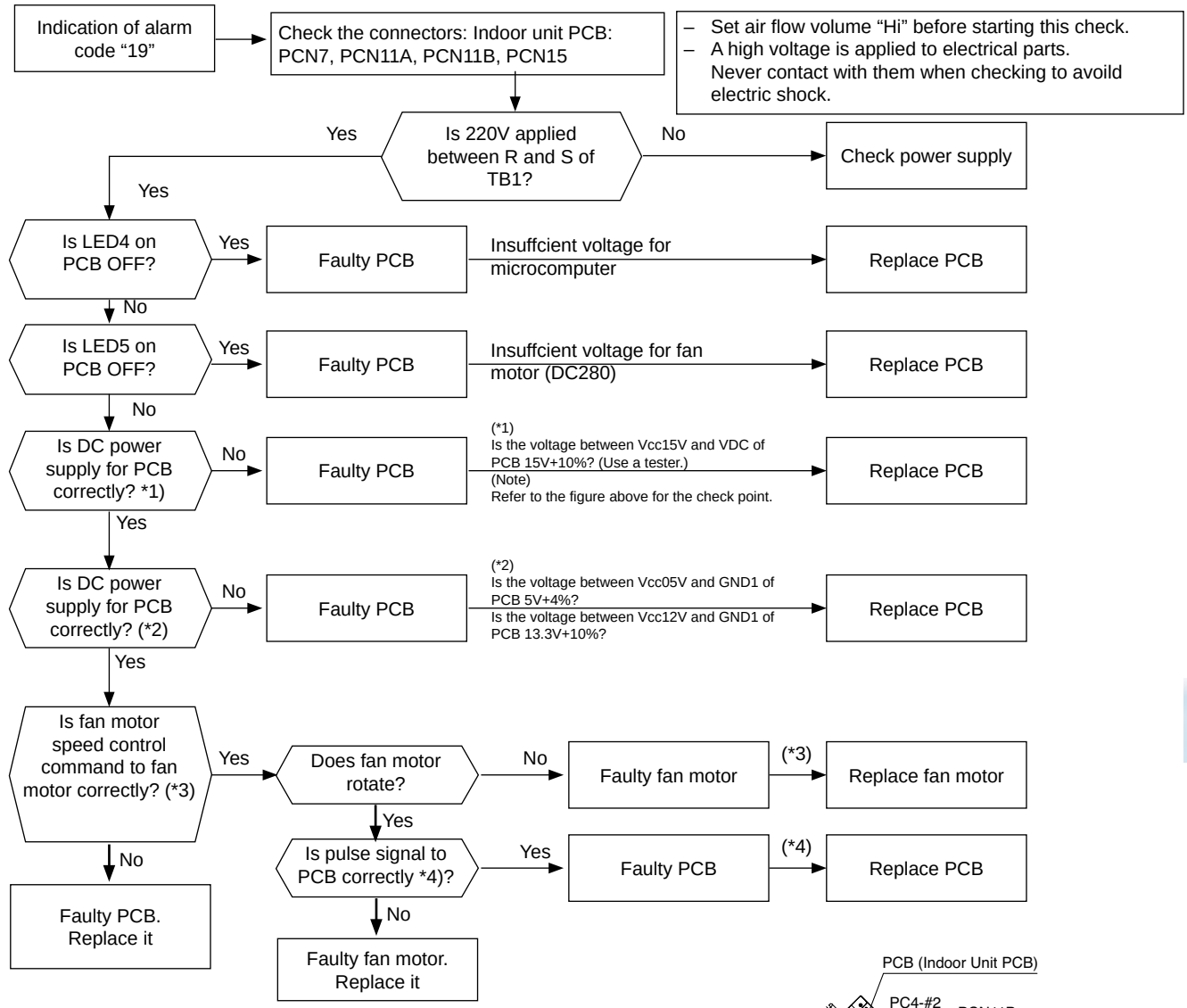

(*3): Disconnect PCN15 on PCB when performing.
If 1V (or over) is applied between PCN15-#5 and VDC on PCB for 10 sec. (Approx.) after starting operation, the fan motor is normal.
(Note) Even when the operation is stopped, 0.3 to 0.4V may be applied. The voltage may not be conducted sequentially after 10 sec. to perform the above operation “H”.

(*4): With PCN15 on PCB connected, if a few volts are applied between VDC and PC4-#2 terminal on PCB, the PCB is normal.
(Note) Even when the operation is stopped, 0.2V (Approx.) may be applied.

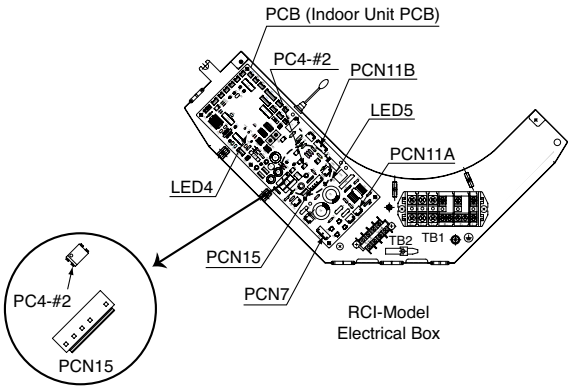

Все каталоги и инструкции здесь: https://splitsystema48.ru/instrukcii-po-ekspluatacii-kondicionerov.html

Alarm code	Description
19	**Activation of the protection device for the indoor fan motor (RPK)**

- The RUN LED flickers and "ALARM" is displayed on the remote control switch.
- The unit number, the alarm code and the unit code are alternately displayed on the set temperature section.
  The unit number and the alarm code are displayed on the display of the outdoor unit PCB.
  – This alarm code is indicated when the following conditions occurs three times in 30 minutes.
    * Indoor fan rotates less than 70rpm for 5 seconds during operation
  Set air flow volume “Hi” before starting this check

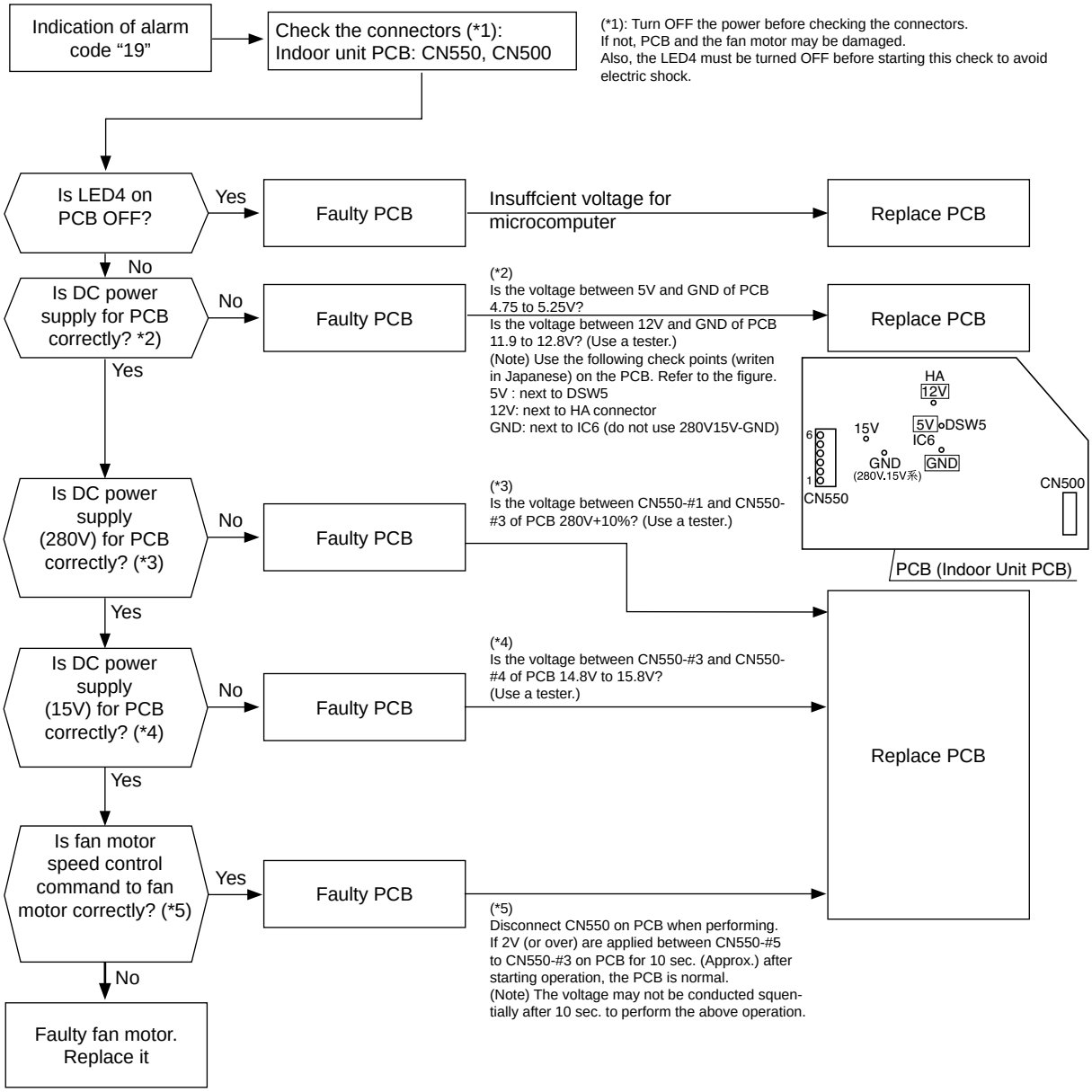

Все каталоги и инструкции здесь: https://splitsystema48.ru/instrukcii-po-ekspluatacii-kondicionerov.html

Alarm code	Description
19	**Activation of the protection device for the indoor fan motor (except RCI and RPK)**

- The RUN LED flickers and "ALARM" is displayed on the remote control switch.
- The unit number, the alarm code and the unit code are alternately displayed on the set temperature section.
  The unit number and the alarm code are displayed on the display of the outdoor unit PCB.
  – This alarm code is displayed when the temperature of the internal thermostat for the indoor fan motor is higher than 130 °C.

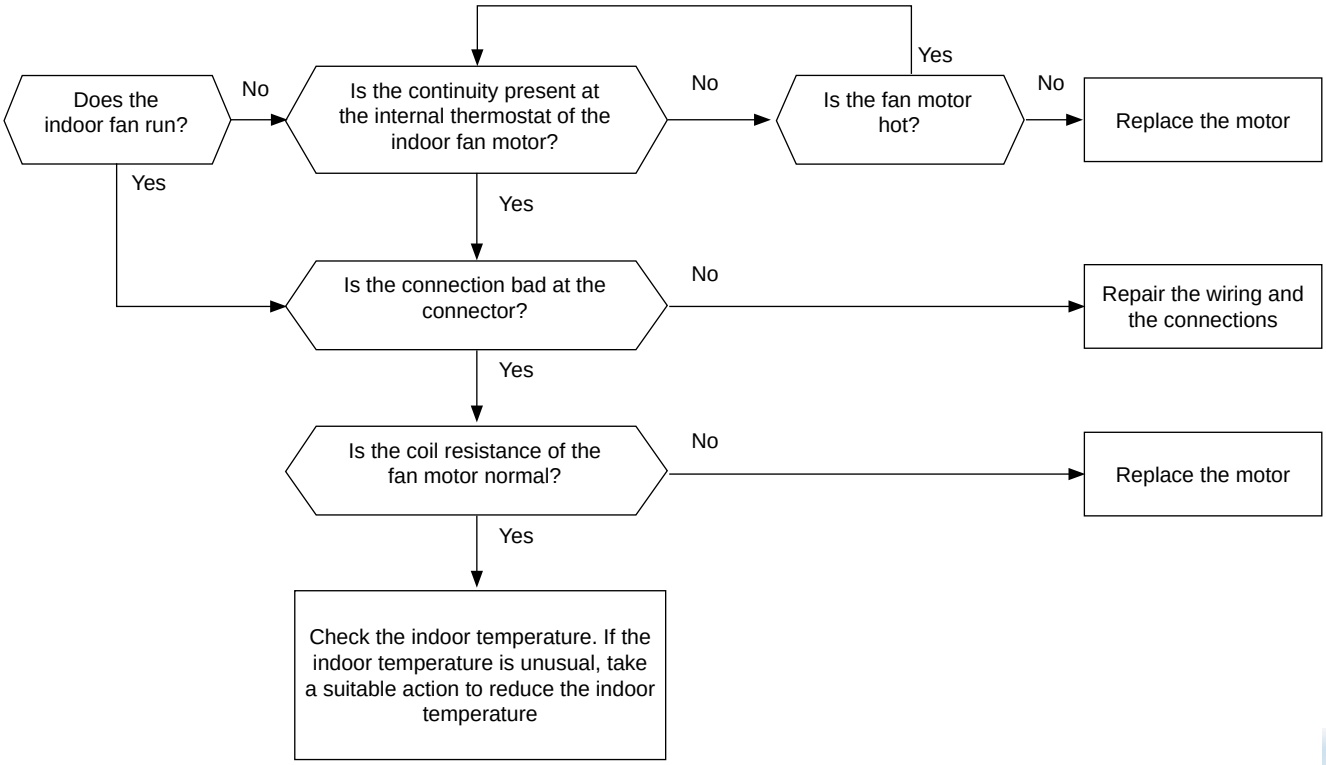

7

Phenomenon	Cause		Check item	Action (Turn OFF the main switch)
Activation of the internal thermostat for the indoor unit fan motor	Faulty indoor unit fan motor		Measure the coil resistance and the insulation resistance	Replace the motor if faulty
	Faulty internal thermostat	Fault	Check the continuity after the fan motor temperature decreases to room temp	Replace the fan motor if there is no continuity
		Insufficient contacting	Measure the resistance by means of the tester	Correct looseness. Replace the connectors
		Incorrect connection	Check the connections	Repair the connections

Все каталоги и инструкции здесь: https://splitsystema48.ru/instrukcii-po-ekspluatacii-kondicionerov.html

Alarm code	Description
21	**Abnormal operation of the high-pressure sensor for the outdoor unit**

- The RUN LED flickers and “ALARM” is displayed on the remote control switch.
- The unit number, the alarm code and the unit code are alternately displayed on the set temperature section. The unit number and the alarm code are displayed on the display of the outdoor unit PCB1.
  - This alarm code is displayed when the high-pressure sensor voltage decreases lower than 0.1 V or increases higher than 4.9V during the operation

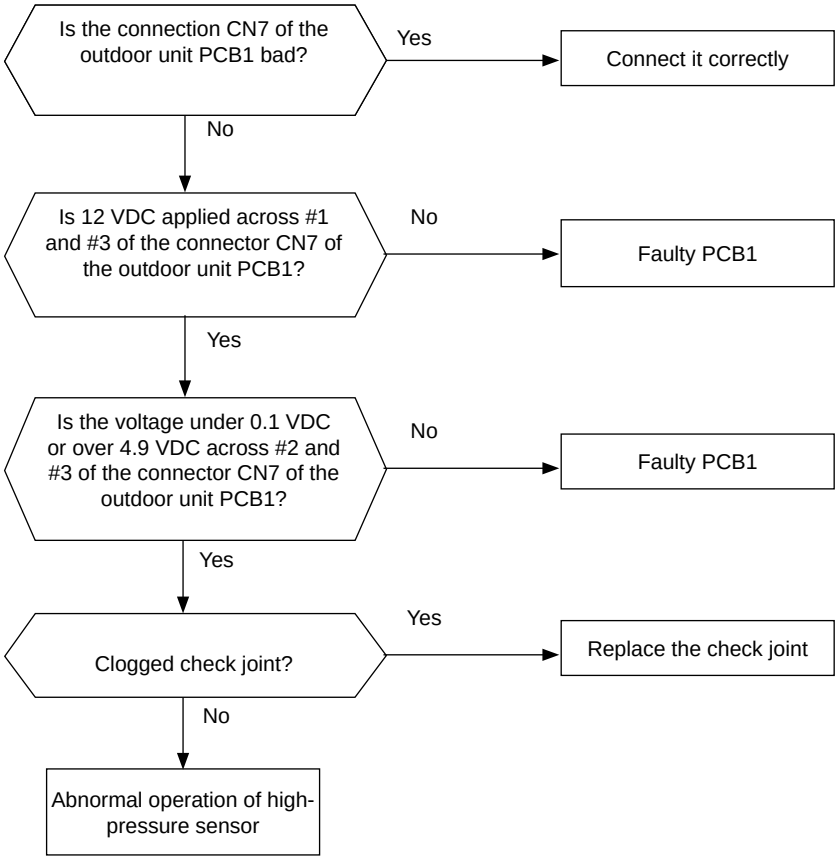

Phenomenon	Cause	Check item	Action (Turn OFF Main Switch)
Faulty high-pressure sensor	Fault	Check that the output voltage is correct	Replace the pressure sensor if faulty
	Incorrect connection	Check the connections	Repair the wiring and the connections
Faulty PCB1		Replace PCB1 and check the operation	Replace PCB1 if faulty
Indicated pressure value is excessively high or low	Malfunction of the pressure sensor due to a faulty check joint	Check the check joint for clogging	Replace the check joint

Все каталоги и инструкции здесь: https://splitsystema48.ru/instrukcii-po-ekspluatacii-kondicionerov.html

Alarm code	Description
22	**Abnormal operation of the thermistor for the outdoor temperature (outdoor unit ambient thermistor)**

- The RUN LED flickers and "ALARM" is displayed on the remote control switch.
- The unit number, the alarm code and the unit code are alternately displayed on the set temperature section.
  The unit number and the alarm code are displayed on the display of the outdoor unit PCB1.
  – This alarm code is displayed when the thermistor is short-circuited (less than 0.2 kΩ) or cut (greater than 500 kΩ) during the operation. However, this alarm occurs during the test run mode only. In the case that the thermistor is abnormal during the operation, the operation continues based on the assumption that the outdoor temperature is 35 °C (Cooling) / 6 °C (Heating).

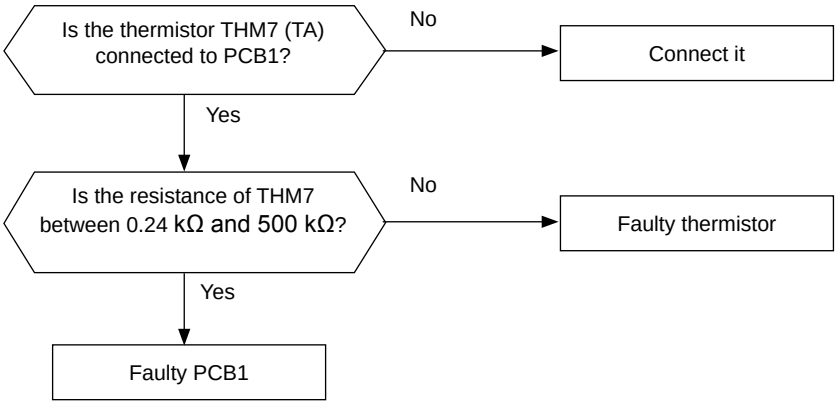

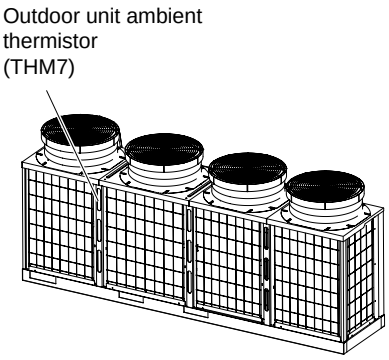

7

Phenomenon	Cause	Check item	Action (Turn OFF Main Switch)
Faulty thermistor for the outdoor unit ambien	Fault	Check resistance	Replace thermistor if faulty
	Incorrect connection	Check wiring to PCB1	Repair wiring and connections
Faulty PCB1		Replace PCB1 and check operation	Replace PCB1 if faulty

Все каталоги и инструкции здесь: https://splitsystema48.ru/instrukcii-po-ekspluatacii-kondicionerov.html

Alarm code	Description
23	**Abnormal operation of thermistor for discharge gas temperature on the top of compressor chamber**

- The RUN LED flickers and "ALARM" is displayed on the remote control switch.
- The unit number, the alarm code and the unit code are alternately displayed on the set temperature section.
  The unit number and the alarm code are displayed on the display of the outdoor unit PCB1.
  – This alarm code is displayed when the thermistor is short-circuited (less than 0.9 kΩ) for one second or cut (greater than 5946 kΩ) during the operation. If you find an abnormal operation of the thermistor, check all the thermistors as shown below.

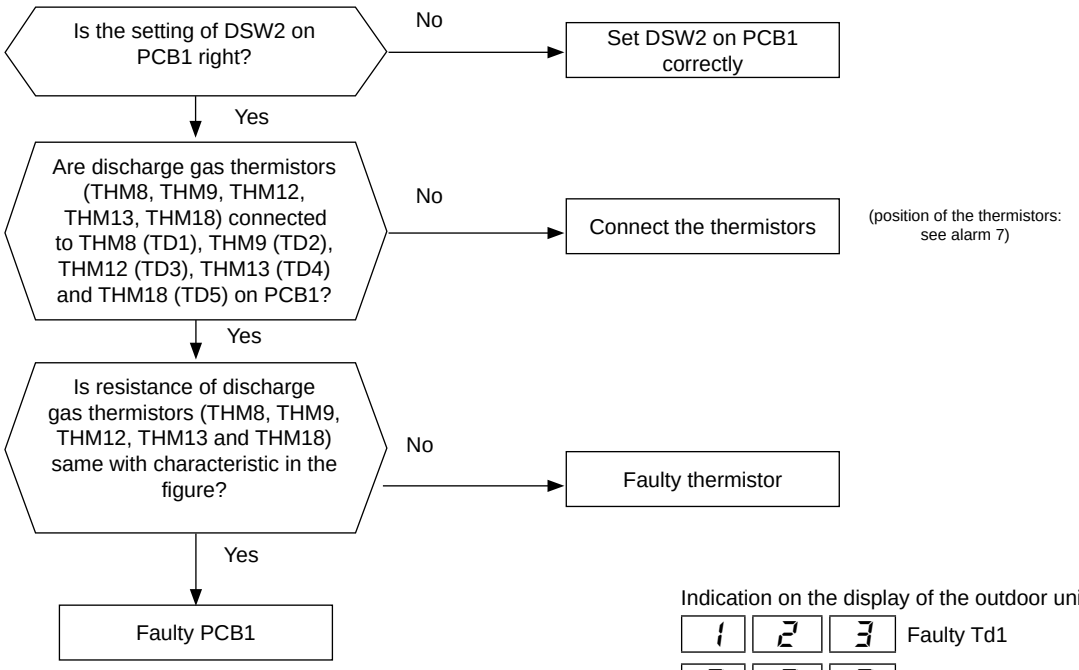

Thermistor characteristics

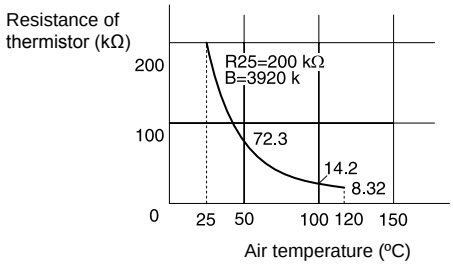

Indication on the display of the outdoor unit PCB1

1	2	3	Faulty Td1
2	2	3	Faulty Td2
3	2	3	Faulty Td3
4	2	3	Faulty Td4
5	2	3	Faulty Td5

Phenomenon	Cause	Check item	Action (Turn OFF Main Switch)
Faulty thermistor for the discharge gas	Fault	Check resistance	Replace thermistor if faulty
	Incorrect connection	Check wiring to PCB1	Repair wiring and connections
Faulty PCB1		Replace PCB1 and check operation	Replace PCB1 if faulty
Incorrect setting of DSW2 on PCB1		Check the setting of DSW2 on PCB1	Correctly set DSW2 on PCB1

Все каталоги и инструкции здесь: https://splitsystema48.ru/instrukcii-po-ekspluatacii-kondicionerov.html

Alarm code	Description
24	**Abnormal operation of the thermistor for the evaporating temperature during the heating process (outdoor unit)**

- The RUN LED flickers and "ALARM" is displayed on the remote control switch.
- The unit number, the alarm code and the unit code are alternately displayed on the set temperature section. The unit number and the alarm code are displayed on the display of the outdoor unit PCB.
  If you find an abnormal operation of the thermistor, check all the thermistors as shown below.
  – This alarm is indicated when the thermistor is shortcircuited (less than 0.9kΩ) or cut (greater than 5.946kΩ) during running.
  – These thermistors are attached as shown in the figure.

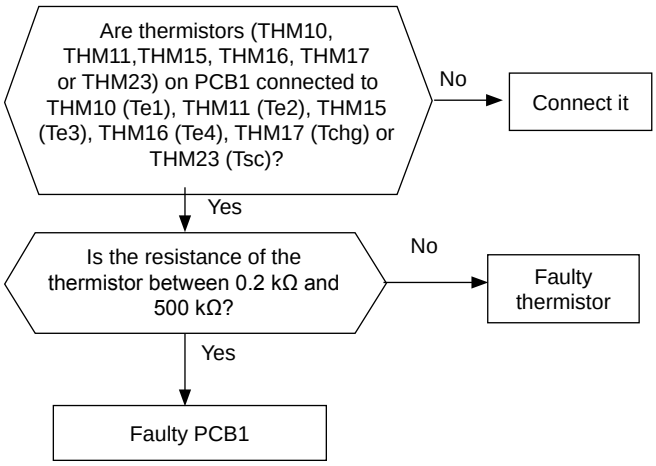

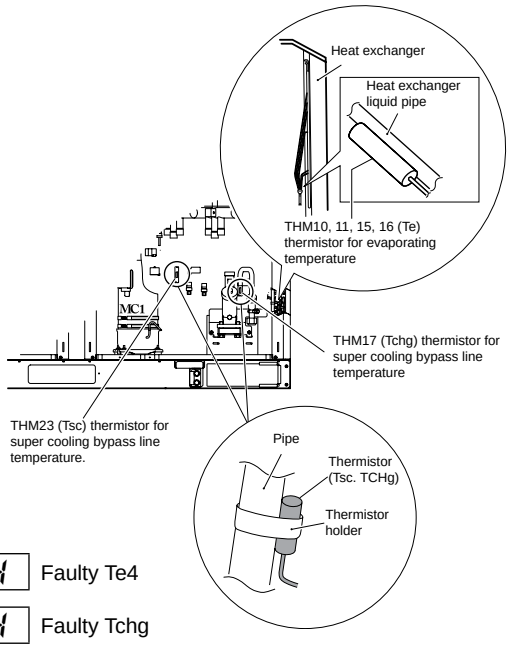

Indication on the display of the outdoor unit PCB1

1 2 4	Faulty Te1	4 2 4	Faulty Te4
2 2 4	Faulty Te2	CH 2 4	Faulty Tchg
3 2 4	Faulty Te3	SC 2 4	Faulty Tsc

7

Phenomenon	Cause	Check item	Action (Turn OFF the main switch)
Faulty thermistor for the evaporating temperature during heating	Fault	Check the resistance	Replace the thermistor if faulty
	Incorrect Connection	Check the wiring to PCB1	Repair the wiring and the connections
Faulty PCB1		Replace PCB1 and check the operation	Replace PCB1 if faulty

Model	Thhermistor No./ ( ): Connector No.					
	Te1 (THM10)	Te2 (THM11)	Te3 (THM15)	Te4 (THM16)	Tchg (THM17)	Tsc (THM23)
RAS-8 to 12FSN2	○	–	–	–	○	○
RAS-14 to 24FSN2	○	○	–	–	○	○
RAS-26 to 42FSN2	○	○	○	–	○	○
RAS-44 to 48FSN2	○	○	○	○	○	○

Все каталоги и инструкции здесь: https://splitsystema48.ru/instrukcii-po-ekspluatacii-kondicionerov.html

Alarm code	Description
29	**Abnormal operation of the low-pressure sensor for the outdoor unit**

- The RUN LED flickers and “ALARM” is displayed on the remote control switch.
- The unit number, the alarm code and the unit code are alternately displayed on the set temperature section. The unit number and the alarm code are displayed on the display of the outdoor unit PCB.
  - This alarm code is displayed when the low-pressure sensor voltage decreases lower than 0.1 V or increases higher than 4.9V during the operation

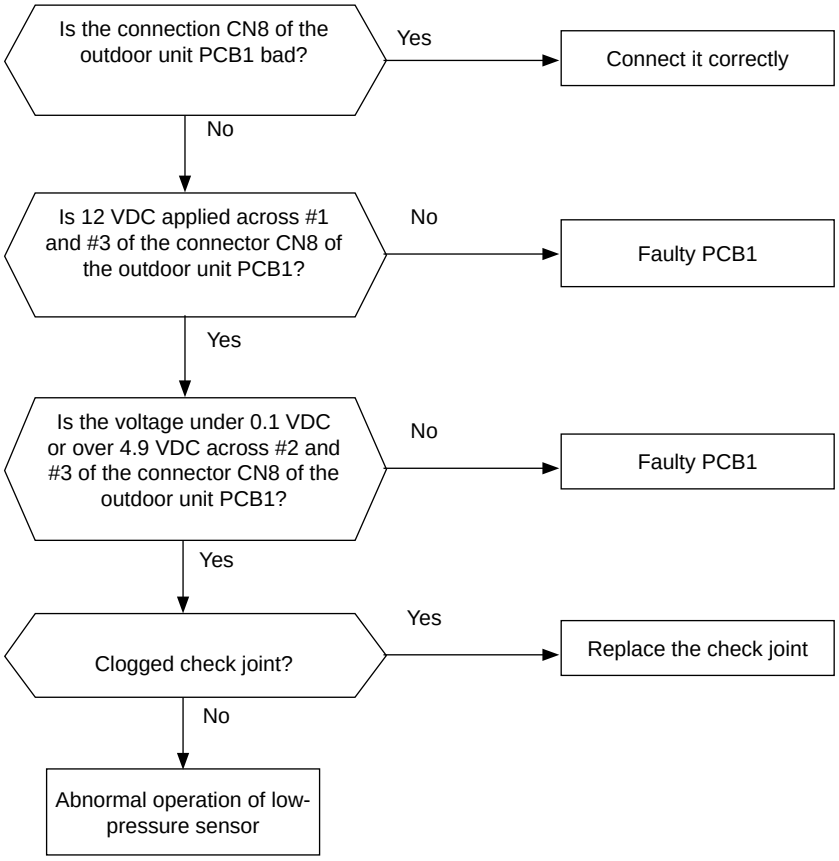

Phenomenon	Cause	Check item	Action (Turn OFF Main Switch)
Faulty low-pressure sensor	Fault	Check that the output voltage is correct	Replace the pressure sensor if faulty
	Incorrect connection	Check the connections	Repair the wiring and the connections
Faulty PCB1		Replace PCB1 and check the operation	Replace PCB1 if faulty
Indicated pressure value is excessively high or low	Malfunction of the pressure sensor due to a faulty check joint	Check the check joint for clogging	Replace the check joint

Все каталоги и инструкции здесь: https://splitsystema48.ru/instrukcii-po-ekspluatacii-kondicionerov.html

Alarm code	Description
31	**Incorrect capacity setting or combined capacity between Indoor Units and Outdoor Unit**

- The RUN LED flickers and “ALARM” is displayed on the remote control switch.
- The unit number, the alarm code and the unit code are alternately displayed on the set temperature section. The unit number and the alarm code are displayed on the display of the outdoor unit PCB1.
  - This alarm code is indicated when the capacity setting dip switch, DSW2 on the outdoor unit PCB1, is not set (all the settings from #1 to #6 are OFF) or mis-setting.
  - This alarm code is indicated when the total indoor unit capacity is smaller than 50% or greater than 130% of the combined outdoor unit capacity.

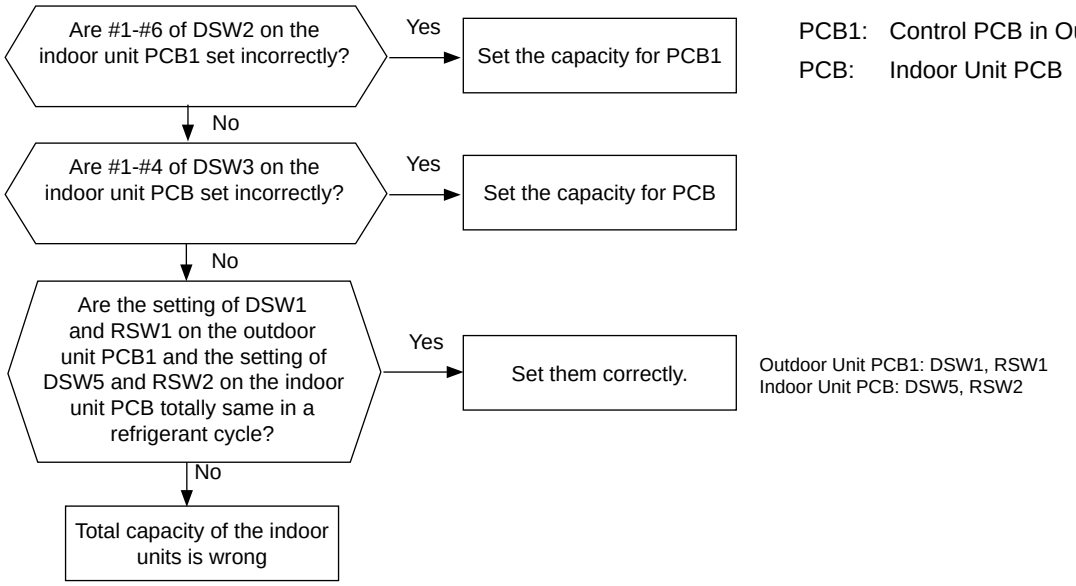

PCB1: Control PCB in Outdoor Unit
PCB: Indoor Unit PCB

Phenomenon	Cause	Check item	Action (Turn OFF Main Switch)
Incorrect capacity setting of Indoor Unit		Check combination of indoor units and capacity setting on PCB.	Correctly set dip switch, DSW3.
Incorrect capacity setting of Outdoor Unit		Check capacity setting on outdoor unit PCB1.	Correctly set dip switch, DSW2.
Total Indoor Unit capacity connected to the Outdoor Unit is beyond the permissible range		Check outdoor unit model by calculating total indoor units capacity.	Ensure that total indoor unit capacity is from 50% to 130%.
Refrigerant cycle setting of the outdoor unit and the indoor unit is different		Check the refrigerant cycle setting on outdoor unit PCB1 and indoor unit PCB	Set them correctly.

7

Combination

Outdoor unit model	Combined Indoor Unit	
	Total quantity *1)	Total capacity (HP)
RAS-8FSN2	2-13	4.0-10.4
RAS-10FSN2	2-16	5.0-13.0
RAS-12FSN2	2-16	6.0-15.6
RAS-14FSN2	2-20	7.0-18.2
RAS-16FSN2	2-20	8.0-20.8
RAS-18FSN2	2-20	9.0-23.4
RAS-20FSN2	2-20	10.0-26.0
RAS-22FSN2	2-20	11.0-28.6
RAS-24FSN2	2-27	12.0-31.2
RAS-26FSN2	2-29	13.0-33.8
RAS-28FSN2	2-31	14.0-36.4

Outdoor unit model	Combined Indoor Unit	
	Total quantity *1)	Total capacity (HP)
RAS-30FSN2	2-32	15.0-39.0
RAS-32FSN2	2-32	16.0-41.6
RAS-34FSN2	2-34	17.0-44.2
RAS-36FSN2	2-34	18.0-46.8
RAS-38FSN2	2-38	19.0-49.4
RAS-40FSN2	2-38	20.0-52.0
RAS-42FSN2	2-42	21.0-54.6
RAS-44FSN2	2-42	22.0-57.2
RAS-46FSN2	2-46	23.0-59.8
RAS-48FSN2	2-46	24.0-62.4

Refrigerant Cycle No. Setting

	Setting Switch	
	10 digit	1 digit
	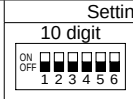	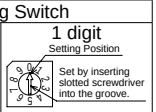
Outdoor Unit	DSW1	RSW1
Indoor Unit (H-LINK II)	DSW5	RSW2

Ex.: In Case of Setting Refrigerant Cycle No. 25

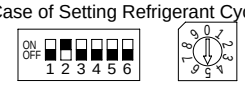

Turn ON No. 2 pin. Set Dial No.5.

DSW and RSW setting before shipment is 0.
Maximum in setting refrigerant cycle No. is 63.

Все каталоги и инструкции здесь: https://splitsystema48.ru/instrukcii-po-ekspluatacii-kondicionerov.html

Alarm code	Description
35	**Incorrect indoor number setting**

- The RUN LED flickers and “ALARM” is displayed on the remote control switch.
- The unit number, the alarm code and the unit code are alternately displayed on the set temperature section. The unit number and the alarm code are displayed on the display of the outdoor unit PCB1.
  - This alarm code is indicated 5 minutes after power is supplied to the outdoor unit when the indoor unit No. connected to the outdoor unit is duplicated by setting of DSW and RSW

NOTE:
In the case of H-LINK System, this alarm code is indicated when DSW1 and RSW1 of the outdoor unit PCB1 and DSW5 and RSW2 of the indoor unit PCB are incorrectly set.

In this case, set them correctly after turning OFF the main switch, and again turn ON the main switch. When the refrigerant number setting of outdoor unit (H-LINK II) and the one of outdoor unit (H-LINK) are duplicated, the alarm “35” may go ON and OFF repeatedly.

PCB1: Control PCB in Outdoor Unit

Все каталоги и инструкции здесь: https://splitsystema48.ru/instrukcii-po-ekspluatacii-kondicionerov.html

Alarm code	Description
38	**Abnormality of picking up circuit for protection (Outdoor Unit)**

- The RUN LED flickers and “ALARM” is displayed on the remote control switch.
- The unit number, the alarm code and the unit code are alternately displayed on the set temperature section. The unit number and the alarm code are displayed on the display of the outdoor unit PCB1.
  - This alarm code is indicated when AC 220V or 240V is not detected in A* or B* during inverter compressor stoppage.
    When outdoor AC fan motor is stopped and ITO opens for 5 seconds or shorter, the alarm is indicated.
    The alarm is also indicated if AC fan motor is faulty when using snow sensor.

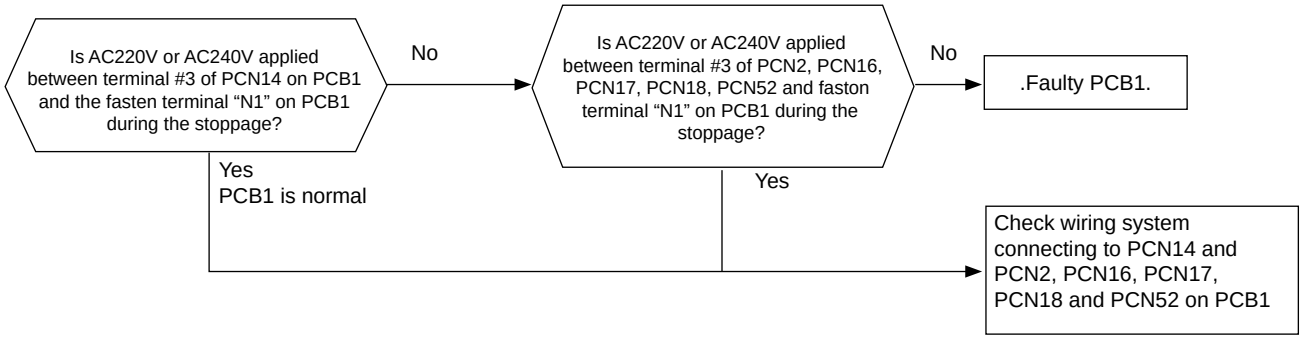

Indication on the display of the outdoor unit PCB1

		3	8	Abnormality internal thermostat for AC fan motor (ITO2, ITO4)
	1	3	8	Abnormality pressure switch for number 1 compressor protection (PSH1)
	2	3	8	Abnormality pressure switch for number 2 compressor protection (PSH2)
	3	3	8	Abnormality pressure switch for number 3 compressor protection (PSH3)
	4	3	8	Abnormality pressure switch for number 4 compressor protection (PSH4)
	5	3	8	Abnormality pressure switch for number 5 compressor protection (PSH5)

Phenomenon	Cause	Check item	Action (Turn OFF Main Switch)
Activation of picking up circuit for protection	Starting outdoor unit at activation of pickig up circuit for protection	Alarm Code Hist: “02” and “09” before “38”.	Refer to Alarm Code “02” and “09”
	Incorrect connection	Check the voltage that is supplied to the connectors	Repair the wiring connections
Faulty PCB1			Replace PCB1

Все каталоги и инструкции здесь: https://splitsystema48.ru/instrukcii-po-ekspluatacii-kondicionerov.html

Alarm code	Description
39	**Abnormality of running current at constant compressor**

- The RUN LED flickers and “ALARM” is displayed on the remote control switch.
- The unit number, the alarm code and the unit code are alternately displayed on the set temperature section. The unit number and the alarm code are displayed on the display of the outdoor unit PCB1.
  - This alarm code is displayed when the following conditions occurs:
    The running current of the constant speed compressor exceeds the value of the overcurrent limitation during the operation.
    The running current of the constant speed compressor detected is 0A, this value is the same 3 minutes after stopping all the compressors and this phenomenon occurs three times within 30 minutes.

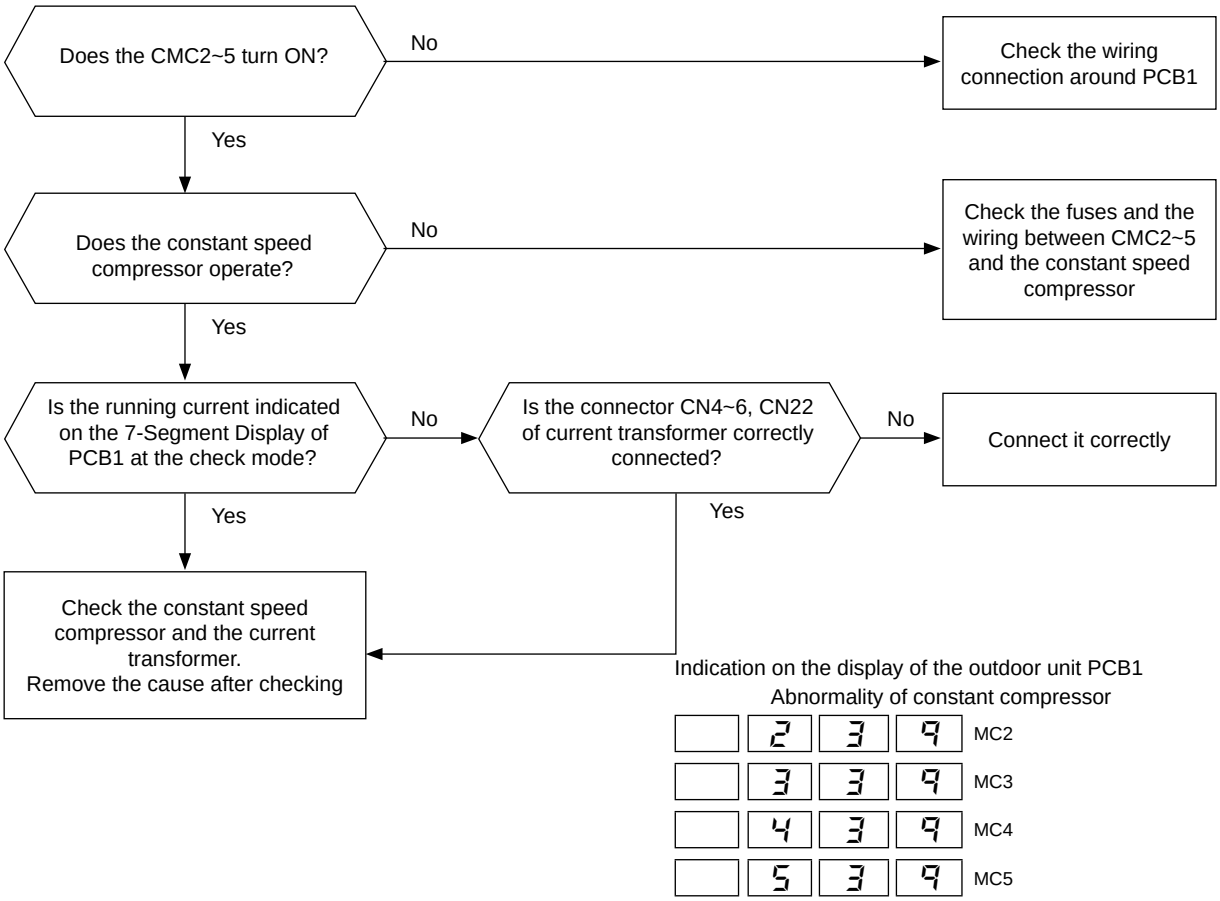

Model	Thhermistor No./ ( ): Connector No.			
	CT2 (CN4)	CT3 (CN5)	CT4 (CN6)	CT5 (CN22)
RAS-14 and 16FSN2	○	–	–	–
RAS-18~28FSN2	○	○	–	–
RAS-30~36FSN2	○	○	○	–
RAS-38~48FSN2	○	○	○	○

CT: Current Transformer

Все каталоги и инструкции здесь: https://splitsystema48.ru/instrukcii-po-ekspluatacii-kondicionerov.html

Phenomenon	Cause		Check item	Action (Turn OFF Main Switch)
Overcurrent of the compressor motor	Excessively large running current of the compressor motor		Excessively high voltage or low voltage of the power source	Operate within 380V±10%(50Hz) or 415V±10%(50Hz)
			Imbalance among phases at the power source	Adjust the voltage between each phase
			Excessively high discharge pressure	Check for causes
	Single phase operation		Blown out fuse for the power source	Replace the fuses
			Looseness of the screws for the power source	Tightly fix the screws
			Deterioration of the contact of the magnetic switch for the compressor	Replace the magnetic contactor
	Seizure of the compressor bearing		Locked-up?	Replace the compressor
	Insulation failure of the compressor motor		Measure the insulation resistance	Replace the compressor
	Faulty CT	Fault	Check the continuity during the stoppage	Replace CT when faulty
		Incorrect connection	Measure the resistance by means of the tester	Remove looseness and replace the connectors
		Incorrect wiring	Check the wiring	Correct the wiring

Все каталоги и инструкции здесь: https://splitsystema48.ru/instrukcii-po-ekspluatacii-kondicionerov.html

Alarm code	Description
43	**Activation for protecting the system from the low compression ratio**

- The RUN LED flickers and “ALARM” is displayed on the remote control switch.
- The unit number, the alarm code and the unit code are alternately displayed on the set temperature section. The unit number and the alarm code are displayed on the display of the outdoor unit PCB1.
  - This alarm code is displayed when a compression ratio , ε = {(Pd + 0.1) /(Ps + 0.06)} is calculated from a discharge pressure (Pd MPa) and a suction pressure (Ps MPa), and the condition which is lower than ε = 1.8 occurs three or more than three times in one hour.

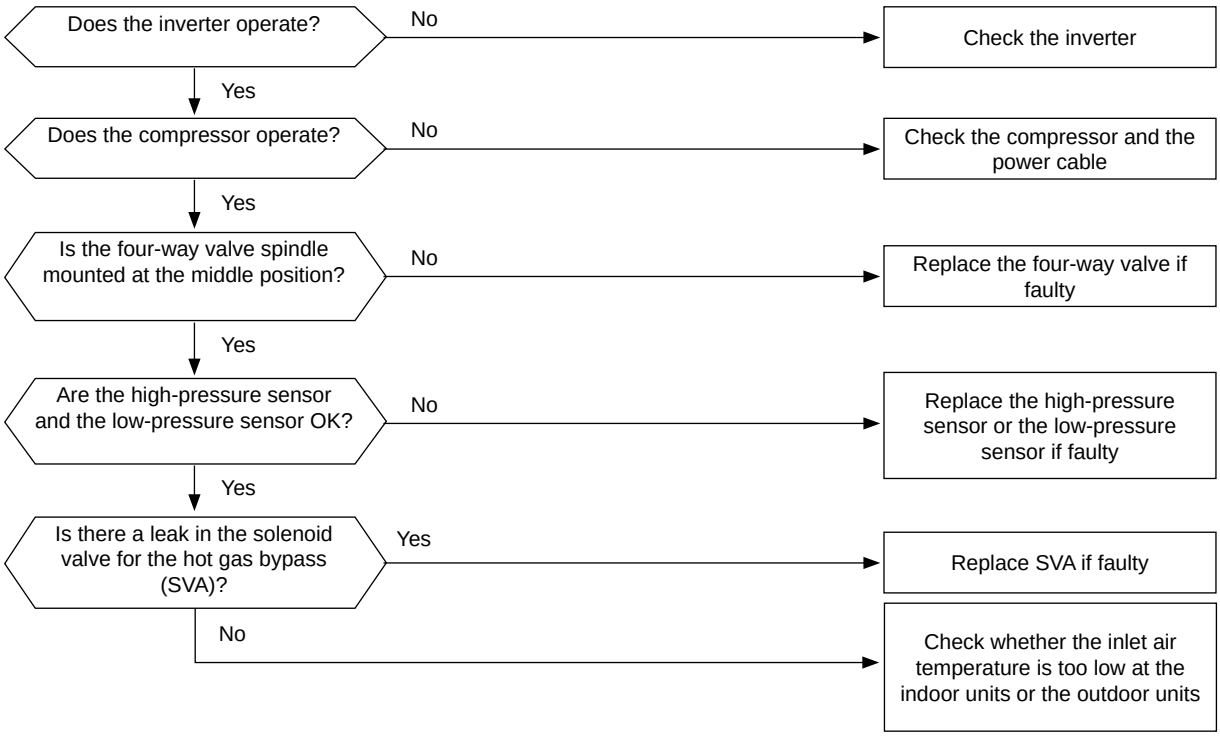

Phenomenon	Cause	Check item	Action (Turn OFF Main Switch)
Excessively low compression ratio	Inverter is not functioning	Check the inverter	Repair the faulty part
	Compressor is not operating	Check the compressor	Replace the comp. if faulty
	Valve stoppage at medium position of 4-way valve	Measure the suction pipe temp. of the 4-way valve	Replace the 4-way valve if faulty
	Abnormal operation of the high-pressure sensor or the low-pressure sensor	Check the connector for PCB1, the power source and the pressure indication	Replace the sensor if faulty
	Excessively low air inlet temperature of the indoor unit	Check the indoor unit and the outdoor unit air temp. thermistor	Replace the thermistor if faulty
	Leakage of the solenoid valve (outdoor unit)	Check the solenoid valve	Replace SVA if leaking

Все каталоги и инструкции здесь: https://splitsystema48.ru/instrukcii-po-ekspluatacii-kondicionerov.html

Alarm code	Description
44	**Activation for protecting the system from excessively low suction pressure**

- The RUN LED flickers and “ALARM” is displayed on the remote control switch.
- The unit number, the alarm code and the unit code are alternately displayed on the set temperature section. The unit number and the alarm code are displayed on the display of the outdoor unit PCB1.
  - In case that compressor is operated under the condition that is higher than 1.5MPa of suction pressure (Ps) for 1 minute, all compressors are stopped and retry operation is started after 3 minutes. However the alarm code is indicated when same phenomenon is occurred at two times within the next 30 minutes.

PCB1: Control PCB in Outdoor Unit
PCB: Indoor Unit PCB

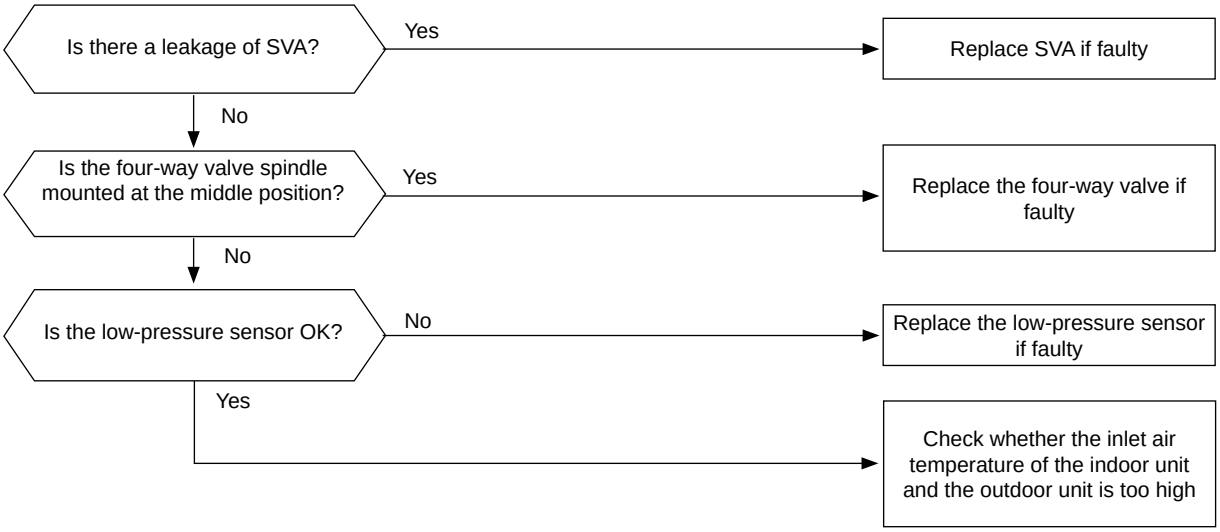

7

Phenomenon	Cause	Check item	Action (Turn OFF Main Switch)
Excessively low suction pressure	Leakage of solenoid valve (SVA)	Check the outlet pipe temp of (SVA)	Check the connect wires. Replace (SVA) if faulty
	Valve stoppage at the medium position of the 4-way valve	Measure the suction gas temp. of 4-way valve	Replace the 4-way valve if faulty
	Abnormal suction pressure sensor	Check the connectors of PCB1 and the power source	Replace the sensor if faulty
	Excessively high indoor unit and outdoor unit suction air temperature	Check the indoor unit and the outdoor unit suction air temp. thermistor	Replace the thermistor if faulty

Все каталоги и инструкции здесь: https://splitsystema48.ru/instrukcii-po-ekspluatacii-kondicionerov.html

Alarm code	Description
45	**Activation for protecting the system from excessively high discharge pressure**

- The RUN LED flickers and “ALARM” is displayed on the remote control switch.
- The unit number, the alarm code and the unit code are alternately displayed on the set temperature section. The unit number and the alarm code are displayed on the display of the outdoor unit PCB1.
  - In case that compressor is operated under the condition that is higher than 3.8MPa of suction pressure (Pd) for 1 minute, all compressors are stopped and retry operation is started after 3 minutes. However the alarm code is indicated when same phenomenon is occurred at two times within the next 30 minutes..

PCB1: Control PCB in Outdoor Unit
PCB: Indoor Unit PCB

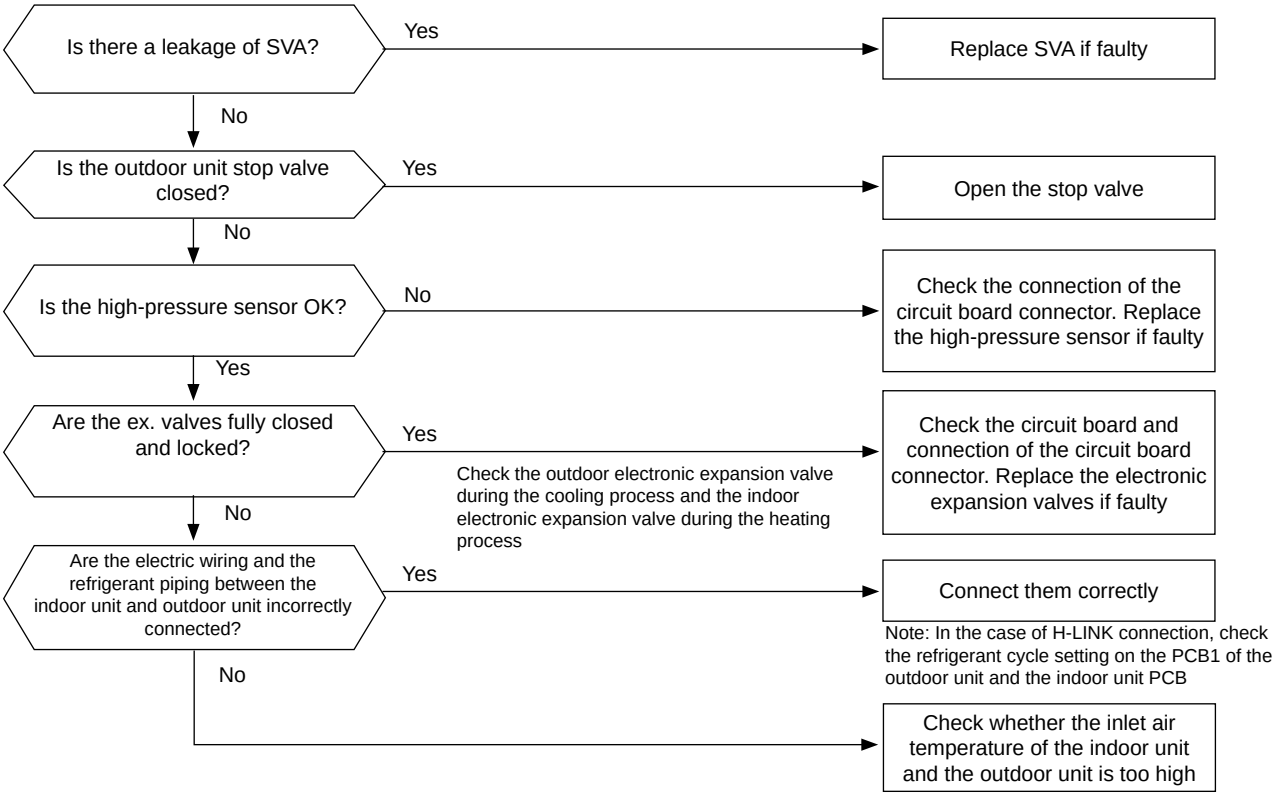

Phenomenon	Cause	Check item	Action (Turn OFF Main Switch)
Excessively high discharge pressure	Leakage of SVA (outdoor unit)	Check the outlet temp. of SVA	Check the connection. Replace SVA if faulty
	Closed stop valve	Check the stop valve	Open the stop valve
	Abnormal high-pressure sensor	Check the connectors for PCB	Replace the pressure sensor if faulty
	Excessively high air inlet temp. of the indoor unit and the outdoor unit	Check the thermistor for inlet air temp. of the indoor unit and the outdoor unit	Replace the thermistor if faulty
	Incorrect connection between indoor unit and outdoor unit	Check electrical system and ref. cycle	Correctly connect
	Locked Ex. valve with fully closed opening	Check the connector for PCB	Repair connector for PCB or ex. valve. Replace it if faulty
Stoppage of the indoor fan (wall type 1.0 to 3.0 only)	Blown out fuses	Check the continuity of fuses	Replace the fuses
	Faulty PCB	Replace PCB and check the operation	Replace PCB if faulty

Все каталоги и инструкции здесь: https://splitsystema48.ru/instrukcii-po-ekspluatacii-kondicionerov.html

Alarm code	Description
47	**Activation for protecting the system from excessively low suction pressure (protection from the vacuum operation)**

- The RUN LED flickers and “ALARM” is displayed on the remote control switch.
- The unit number, the alarm code and the unit code are alternately displayed on the set temperature section. The unit number and the alarm code are displayed on the display of the outdoor unit PCB1.
  - This alarm code is displayed when a suction pressure is lower than 0.09 MPa for over 12 minutes and the alarm occurs two or more times in one hour.

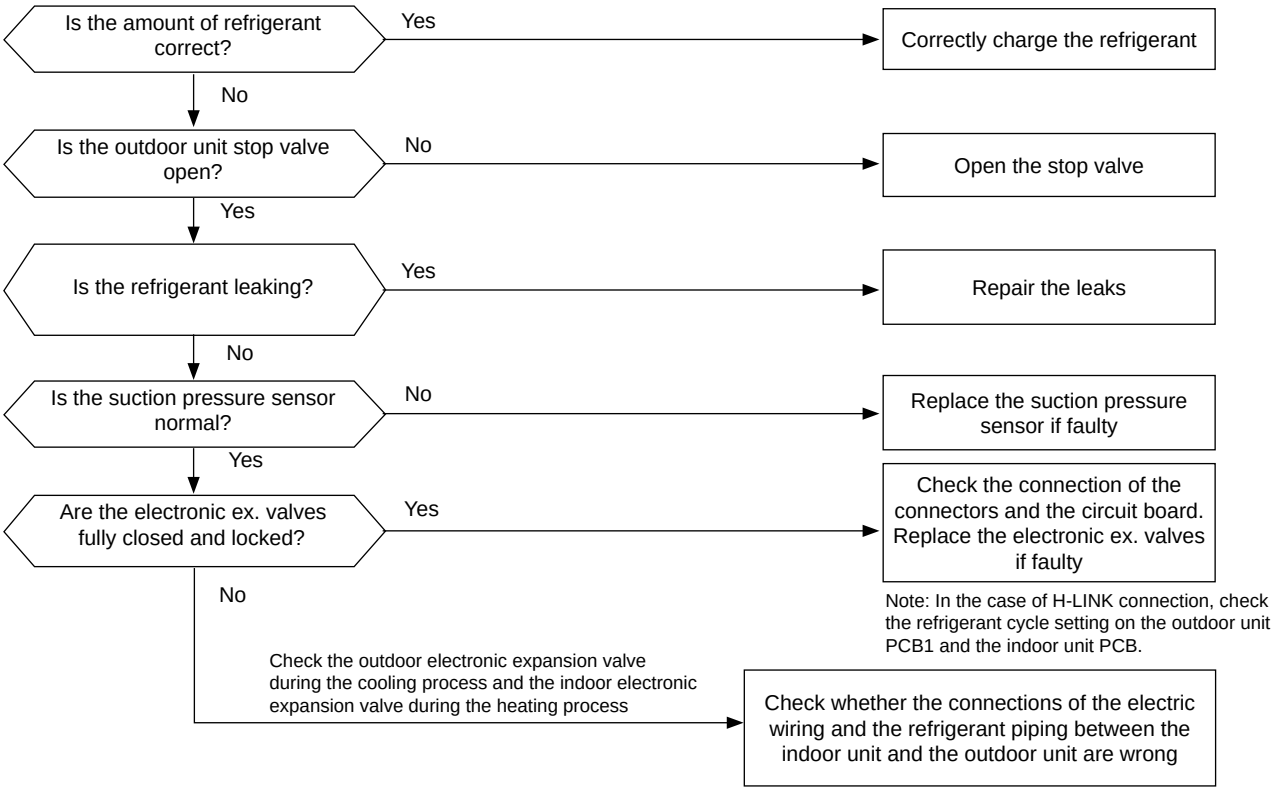

7

Phenomenon	Cause		Check item	Action (Turn OFF Main Switch)
Excessively low suction pressure (in vacuum)	Shortage of refrigerant.		Check the volume of charged refrigerant or check for leakage	Repair the leakage and correctly charge
	Closed stop valve		Check the stop valve	Open the stop valve
	Abnormal low or high-pressure sensor		Check the connector for PCB1	Replace the pressure sensor if faulty
	Incorrect connection between the indoor unit and the outdoor unit		Check the electrical system and the ref. cycle	Correctly connect between the indoor unit and the outdoor unit
	Locked Ex. valve		Check the connector for PCB	Repair or replace the connector of PCB or the ex. valve
	Closed Ex. valve by disconnecting Td thermistor		Check Td thermistors for compressors and measure Td thermistor resistance.	Repair or replace Td thermistor
Internal Thermostat for Outdoor Fan is Activated in Heating process	Faulty outdoor fan motor		Measure the coil resistance and the insulation resistance	Replace the outdoor fan motor if faulty
	Faulty internal thermostat	Fault	Check for the conduction after the temperature of the outdoor fan motor is decreased	Replace the outdoor fan motor
		Incorrect contact	Measure the resistance by means of the tester	Remove looseness and replace the connector
		Incorrect connection	Check the connection	Connect correctly

Все каталоги и инструкции здесь: https://splitsystema48.ru/instrukcii-po-ekspluatacii-kondicionerov.html

Alarm code	Description
48	**Activation of inverter overcurrent protection device (1)**

- The RUN LED flickers and “ALARM” is displayed on the remote control switch.
- The unit number, the alarm code and the unit code are alternately displayed on the set temperature section. The unit number and the alarm code are displayed on the display of the outdoor unit PCB1.
  - The alarm code is indicated when inverter electronic thermal protection is activated at six times within 30 minutes. (Retry operation is performed up to five times.)
    Conditions of Activation:
    Inverter current with 105% of the rated current runs for 30 seconds continuously, or
    Inverter current runs intermittently and the accumulated time reaches up to 3 minutes, in 10 minutes.

PCB1: Control PCB in Outdoor Unit
PCB2: Inverter PCB

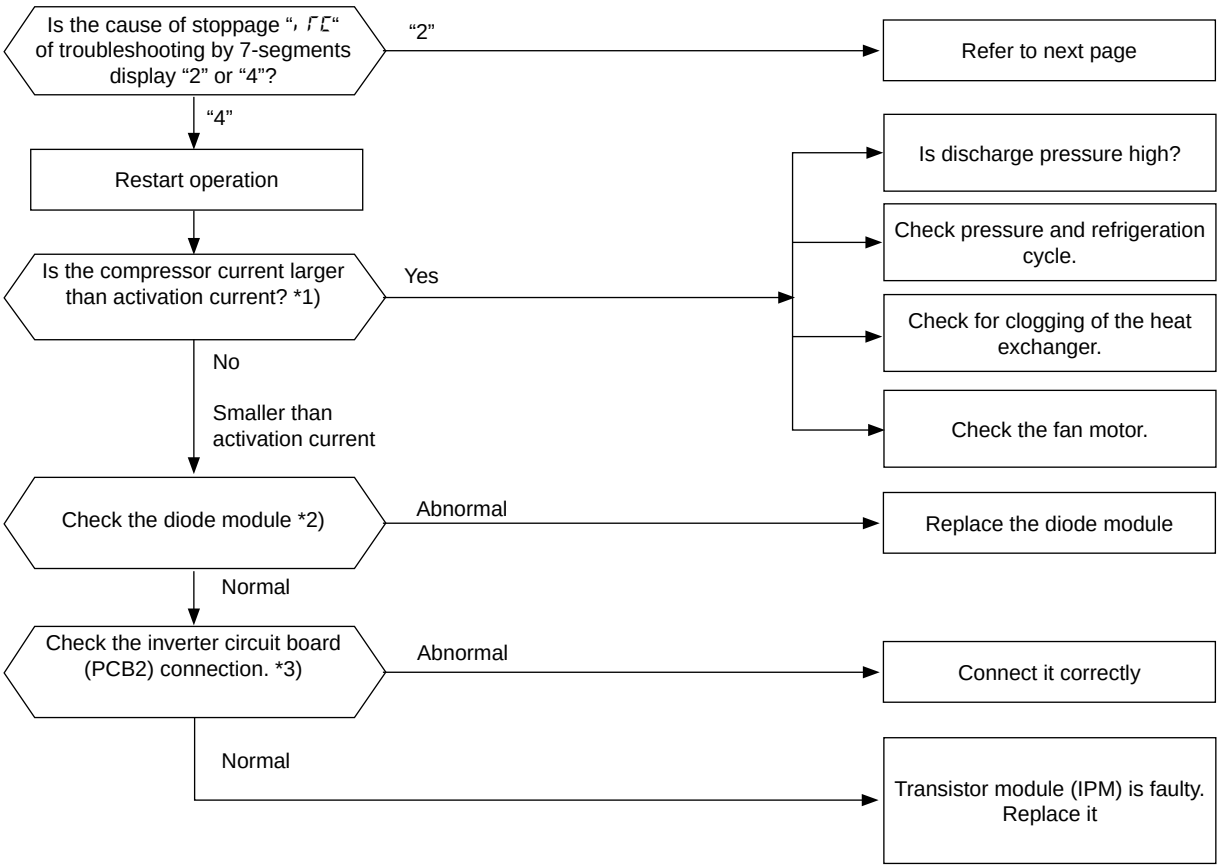

*1): Regarding the setting value of activation current, refer to the item “*Specifications of inverter*”
*2): Regarding replacing or the checking diode module, refer to the item “*Procedure of checking other main parts*”.
*3): Regarding replacing or the checking method for inverter parts, refer to the item “*Procedure of checking other main parts*”.

Все каталоги и инструкции здесь: https://splitsystema48.ru/instrukcii-po-ekspluatacii-kondicionerov.html

Alarm code	Description
48	**Activation of inverter overcurrent protection device (2)**

- The RUN LED flickers and “ALARM” is displayed on the remote control switch.
- The unit number, the alarm code and the unit code are alternately displayed on the set temperature section. The unit number and the alarm code are displayed on the display of the outdoor unit PCB1.
  - The alarm code is indicated when instantaneous overcurrent trip occurs at six times within 30 minutes. (Retry operation is performed up to five times.) Conditions of Activation: Inverter current with 150% of the rated current.

PCB1: Control PCB in Outdoor Unit
PCB2: Inverter PCB

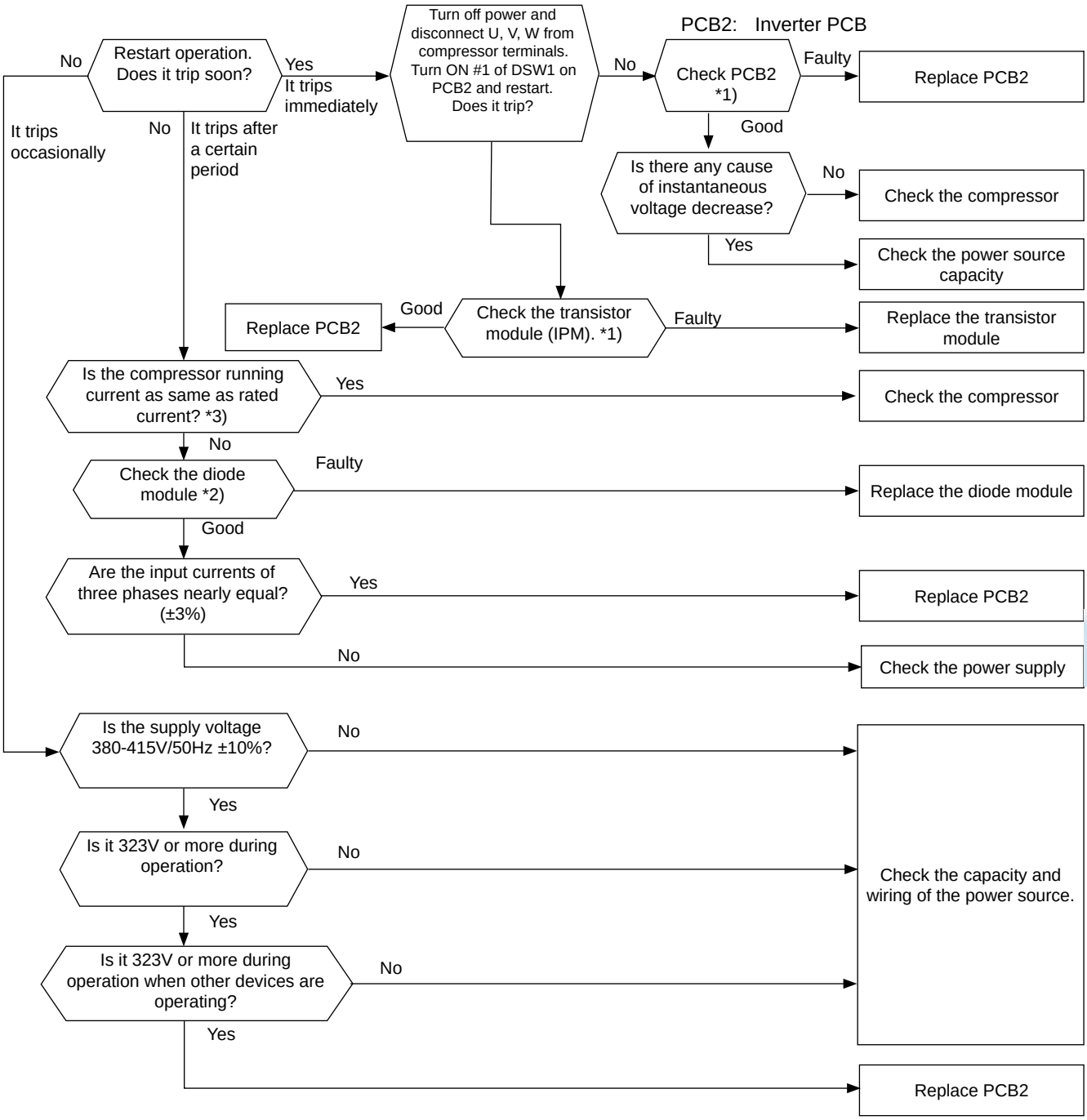

*1): Regarding replacing or the checking method for inverter parts, refer to the item “*Procedure of checking other main parts*”.
*2): Before checking of diode module, refer to the item “*Procedure of checking other main parts*”.
*3): Regarding the setting value of activation current, refer to the item “*Specifications of inverter*”

Все каталоги и инструкции здесь: https://splitsystema48.ru/instrukcii-po-ekspluatacii-kondicionerov.html

Alarm code	Description
51	**Abnormality of current transformer**

- The RUN LED flickers and “ALARM” is displayed on the remote control switch.
- The unit number, the alarm code and the unit code are alternately displayed on the set temperature section. The unit number and the alarm code are displayed on the display of the outdoor unit PCB.
  - In case that the abnormality of alarm code 51 or 54 occurs three times within 30 secons. the alarm code of abnormality occurred for the thirs time is indicated. Retry operation is performed up to second time of abnormality occurrence.

    Condition of Activation:
    When the frequency of the compressor is maintained at 15~18Hz after the compressor is started, one of the absolute values of the running current at each phase U+, U-, V+ and V- is less than 1.5A (including 1.5A).

PCB1: Control PCB in Outdoor Unit
PCB2: Inverter PCB

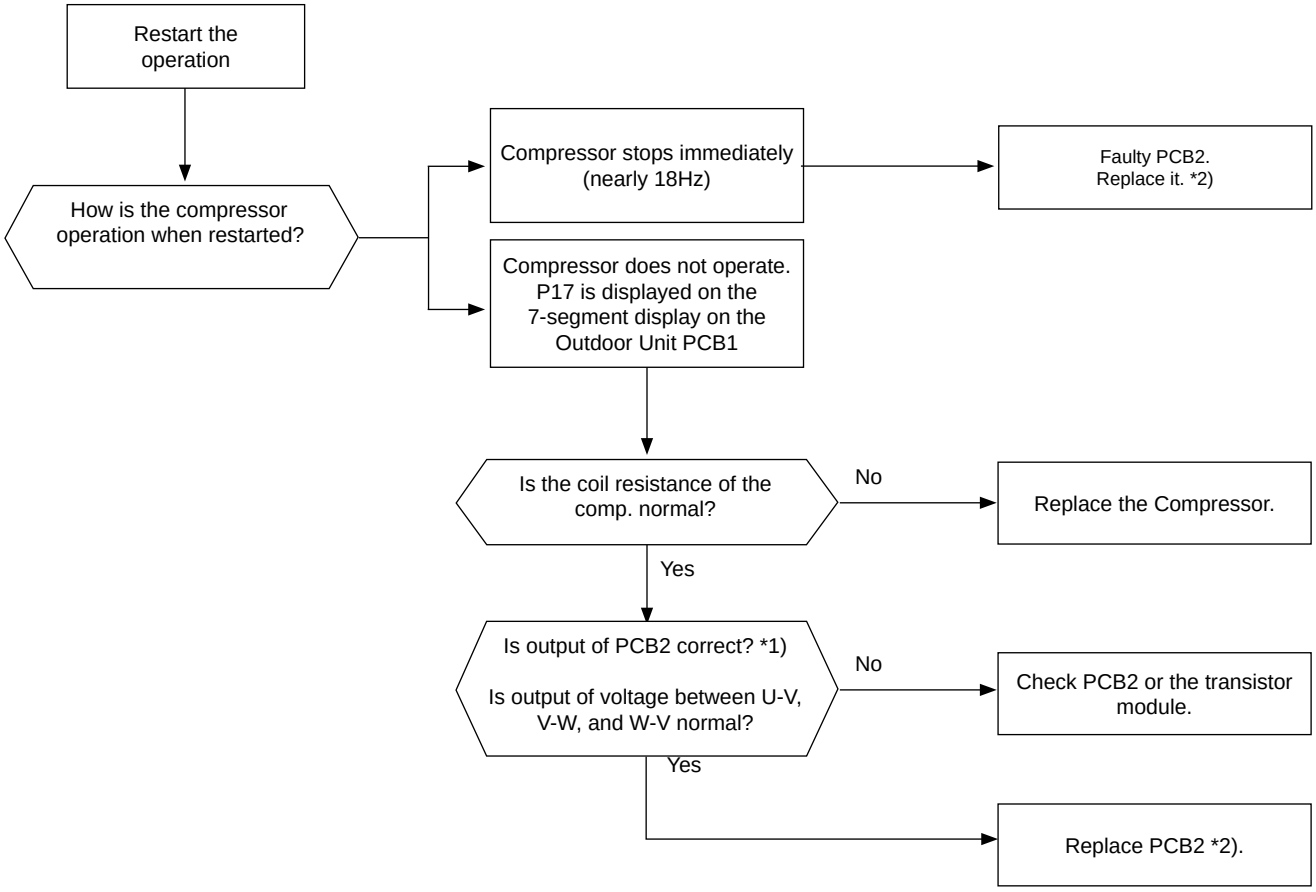

*1: Perform the high voltage discharge work by referring to the item “*Procedure of checking other main parts*” before checking and replacing the inverter parts.

Все каталоги и инструкции здесь: https://splitsystema48.ru/instrukcii-po-ekspluatacii-kondicionerov.html

Alarm code	Description
53	**Inverter error signal detection**

- The RUN LED flickers and “ALARM” is displayed on the remote control switch.
- The unit number, the alarm code and the unit code are alternately displayed on the set temperature section. The unit number and the alarm code are displayed on the display of the outdoor unit PCB.
  - IPM (Transistor Module) have detecting function of abnormality.
  - This alarm is indicated when the transistor module detect the abnormality 7 times in 30 minutes including 7. Retry operation is performed up to the occurrence of 6 times.

    Conditions:

    Abnormal current to the transistor module such as short circuited or grounded
    or
    Abnormal temperature of the transistor module
    or
    Control voltage decrease

    PCB1: Control PCB in Outdoor Unit
    PCB2: Inverter PCB

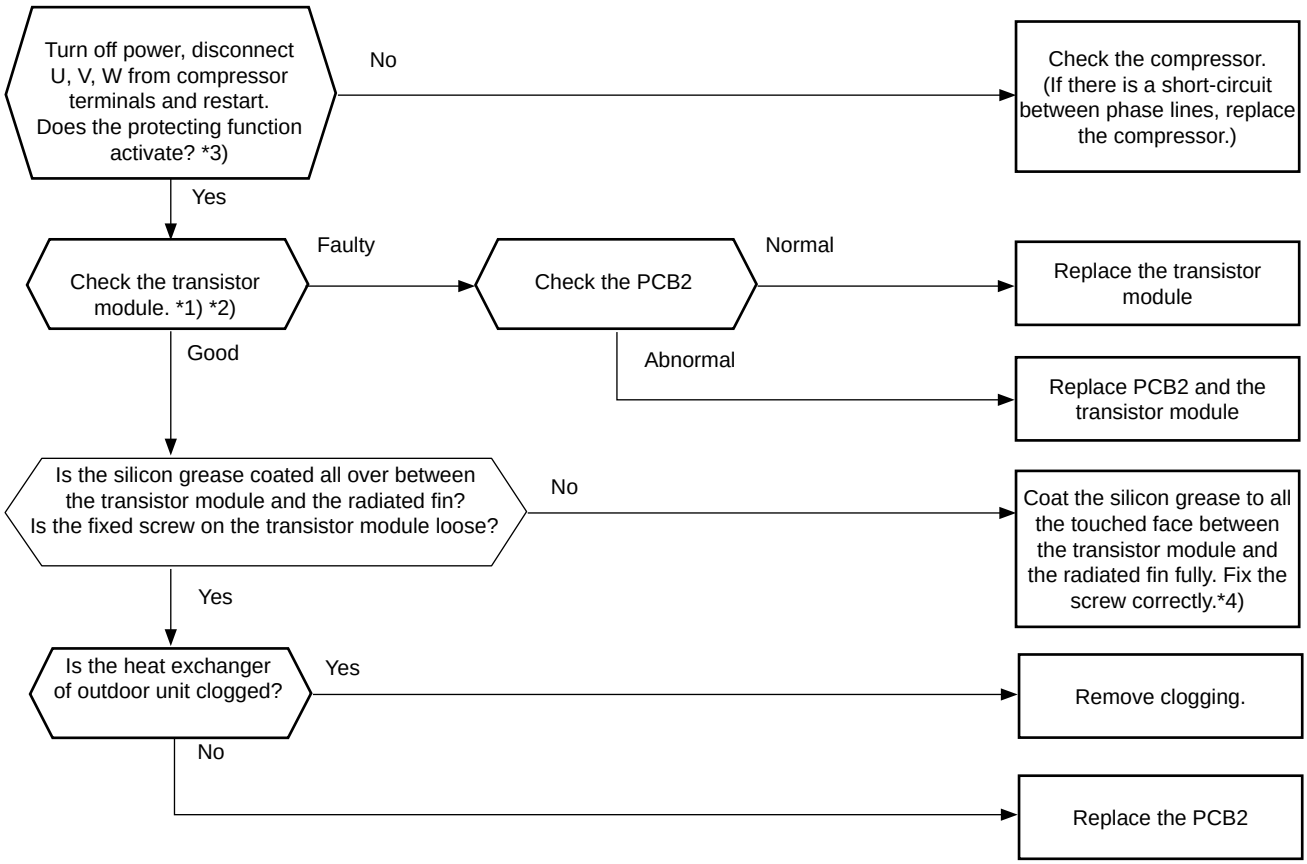

*1): Regarding replacing or checking method for the inverter components, refer to item “*Procedure of checking other main parts*”.
*2): Before the checking of inverter components, refer to item “*Procedure of checking other main parts*” regarding electrical discharge.
*3): Turn ON the No.1 switch of the dip switch DSW1 on PCB2 when restarting with disconnecting the terminals of the compressor. After troubleshooting, turn OFF the No.1 switch of the dip switch DSW1 on PCB2.
*4): Use the silicon grease provided as accessory (Service Parts No.: P22760).

Position of Surge Absorber (SA) (380~415V)

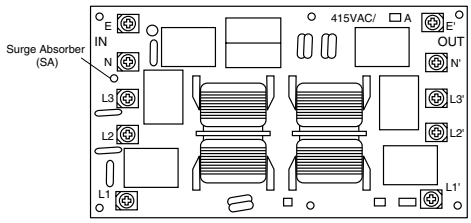

When the unit is applied the excessive surge current due to lighting or other causes, it is indicated this alarm code “04” or the inverter stoppage code (ITC) “11” and the unit can not be operated. In this case, check to ensure the surge absorber (SA) on the noise filter (NF1). If the inside of the surge absorber is normal, turn OFF the power once and wait for PCB2’s LED OFF and turn ON again.

Все каталоги и инструкции здесь: https://splitsystema48.ru/instrukcii-po-ekspluatacii-kondicionerov.html

Alarm code	Description
54	**Increase in the inverter fin temperature**

- The RUN LED flickers and “ALARM” is displayed on the remote control switch.
- The unit number, the alarm code and the unit code are alternately displayed on the set temperature section. The unit number and the alarm code are displayed on the display of the outdoor unit PCB.
  - In case that the abnormality of alarm code 51 or 54 occurs three times within 30 seconds, the alarm code of abnormality occurred for the third time is indicated. Retry operation is performed up to second time of abnormality occurrence.
    Conditions: This alarm is indicated when the temperature of the internal thermostat for transistor module is higher than 100 ºC.

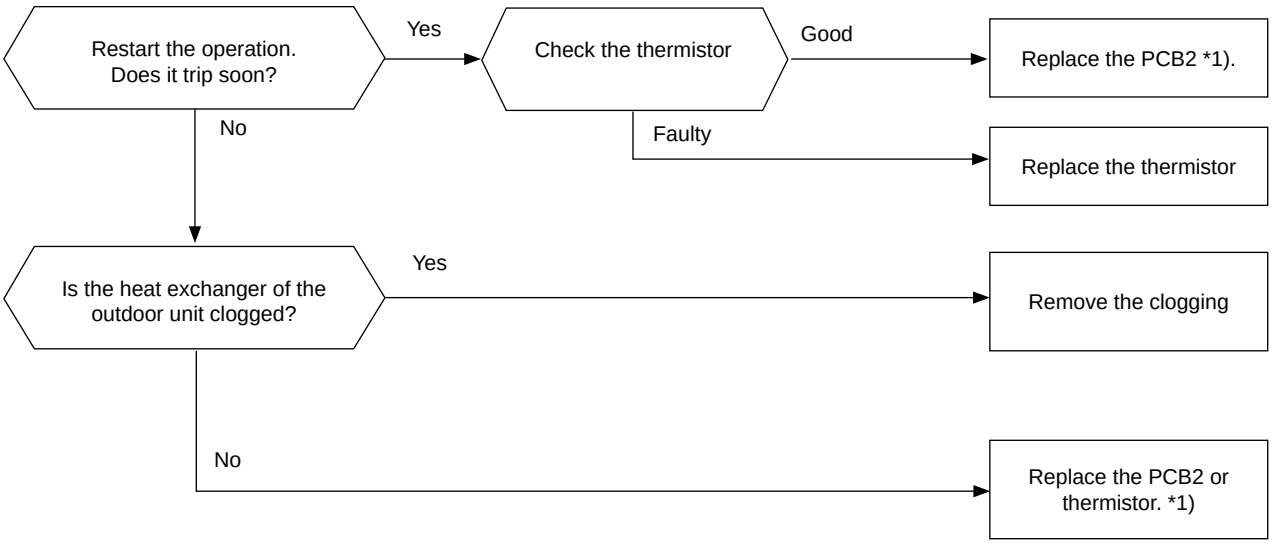

1*): Refer to section “*Procedure of checking other main parts*” for the replacing procedure and the checking procedure for the PCB2.

Все каталоги и инструкции здесь: https://splitsystema48.ru/instrukcii-po-ekspluatacii-kondicionerov.html

Alarm code	Description
55	**Inverter failure**

- The RUN LED flickers and “ALARM” is displayed on the remote control switch.
- The unit number, the alarm code and the unit code are alternately displayed on the set temperature section. The unit number and the alarm code are displayed on the display of the outdoor unit PCB1.
  - This alarm is indicated when the following phenomenon occurs 3 times in 30 minutes including 3:
    (Retry operation is performed up to the occurrence of 2 times.)
    Actual frequency from PCB2 is less than 10Hz (after inverter frequency output from PCB1).
    Conditions: This alarm is indicated when PCB2 is not performed normally.

PCB1: Control PCB in Outdoor Unit
PCB2: Inverter PCB

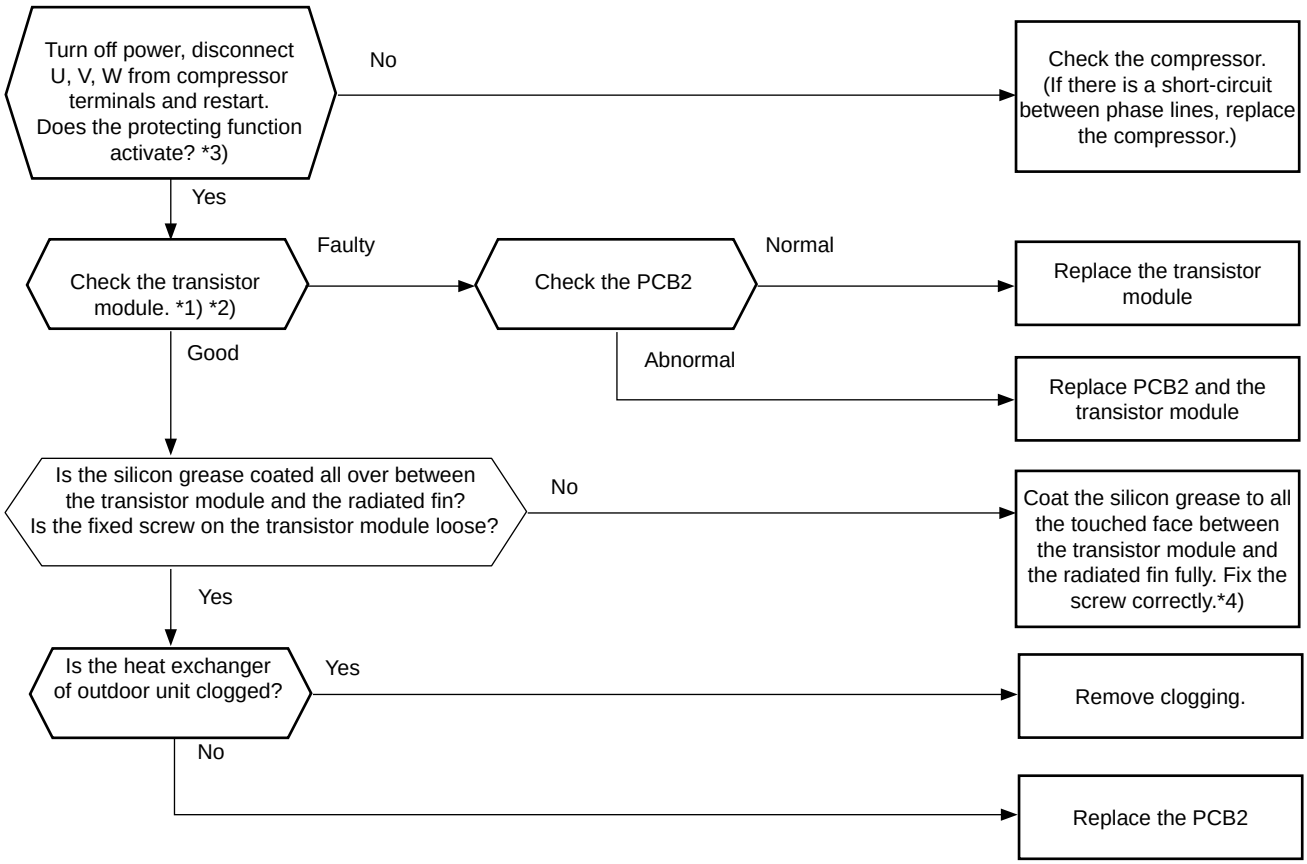

*1): Regarding replacing or checking method for the inverter components, refer to item “*Procedure of checking other main parts*”.
*2): Before the checking of inverter components, refer to item “*Procedure of checking other main parts*”. regarding electrical discharge.
*3): Turn ON the No.1 switch of the dip switch DSW1 on PCB2 when restarting with disconnecting the terminals of the compressor. After troubleshooting, turn OFF the No.1 switch of the dip switch DSW1 on PCB2.
*4): Use the silicon grease provided as accessory (Service Parts No.: P22760).

Position of Surge Absorber (SA) (380~415V)

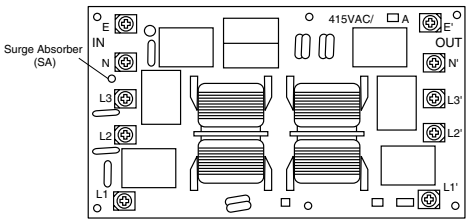

When the unit is applied the excessive surge current due to lighting or other causes, it is indicated this alarm code “04” or the inverter stoppage code (ITC) “11” and the unit can not be operated. In this case, check to ensure the surge absorber (SA) on the noise filter (NF1). If the inside of the surge absorber is normal, turn OFF the power once and wait for PCB2’s LED OFF and turn ON again.

Все каталоги и инструкции здесь: https://splitsystema48.ru/instrukcii-po-ekspluatacii-kondicionerov.html

Alarm code	Description
56 57 58	**Abnormal operation of DC fan motor protection**

- The RUN LED flickers and “ALARM” is displayed on the remote control switch.
- The unit number, the alarm code and the unit code are alternately displayed on the set temperature section. The unit number and the alarm code are displayed on the display of the outdoor unit PCB1.
  - This alarm is indicated when the revolution pulse output from the fan motor is 10 rpm or less and the reverse revolution signal is detected. The fan motor is stopped once, and restarted after 10 seconds.
    If it occurs more than 10 times in 30 minutes, this alarm is indicated. The abnormality occurs when the fan motor is stopped.

PCB1: Control PCB in Outdoor Unit
PCB2: Inverter PCB

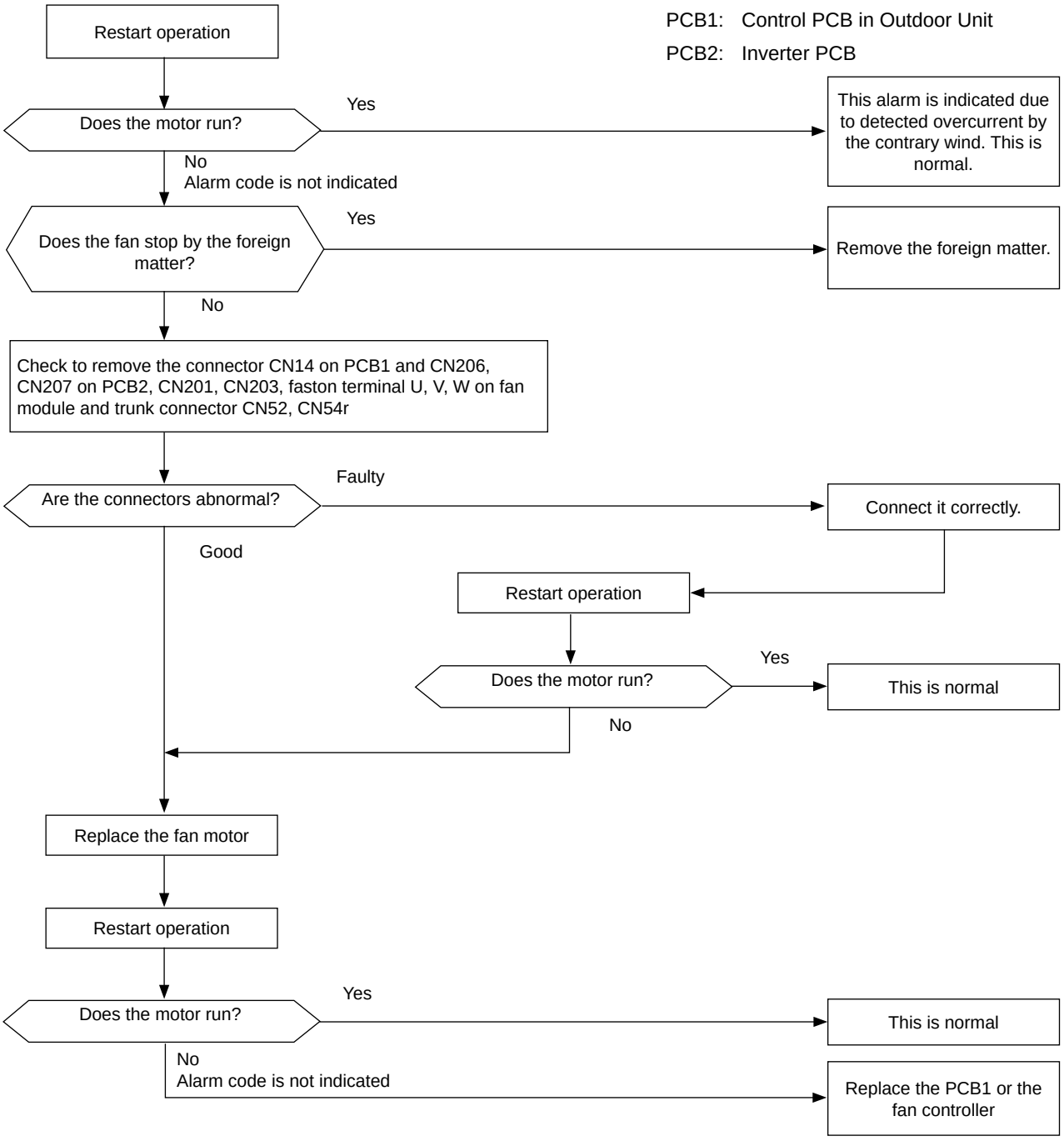

In the case that the fan motor does not run even the PCB1 is replaced, replace the PCB2

Все каталоги и инструкции здесь: https://splitsystema48.ru/instrukcii-po-ekspluatacii-kondicionerov.html

Alarm code	Description
EE	**Compressor protection**

■ This alarm code is displayed when one of the following alarms occurs three times within six hours. If the outdoor unit operates continuously without removing the cause of the alarm, the compressor may be seriously damaged.

Alarm Code:	Content of Abnormality
02	Tripping of the protection device in the outdoor unit
07	Decrease in the discharge gas superheat
08	Increase in the discharge gas temperature
39	Abnormal operation of the running current at the constant speed compressor
43	Pressure ratio decrease protection activating
44	Low pressure increase protection activating
45	High pressure increase protection activating
47	Low pressure decrease protection activating

CAUTION:
You can check these alarms by means of the check mode 1. Follow the action that is indicated in each alarm chart. You can clear these alarms only by turning OFF the main switch to the system. **However, you must pay careful attention before starting, because there is a possibility of causing serious damages to the compressors.**

Alarm code	Description
b5	**Incorrect indoor unit setting**

■ The RUN LED flickers and “ALARM” is displayed on the remote control switch.
■ The unit number, the alarm code and the unit code are alternately displayed on the set temperature section. The unit number and the alarm code are displayed on the display of the outdoor unit PCB1.
(“35” is indicated in the disply of the remote control switch)
– This alarm is indicated under the following conditions.
Turn OFF the power supply and check the setting of DSW and RSW.
Conditions: More than 17 non-FSN2 Series Indoor Unit (H-LINK) are connected to one system.
Measurement: Non-FSN2 Series Indoor Unit (H-LINK) should be 16 or less

Все каталоги и инструкции здесь: https://splitsystema48.ru/instrukcii-po-ekspluatacii-kondicionerov.html

7.2.3. Troubleshooting in check mode

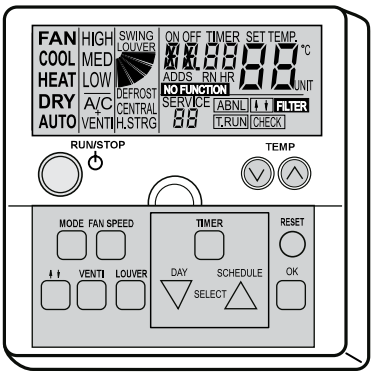

Use the 'OK' switch of the remote control in the following cases:

1. When the RUN LED is flickering.
2. To trace back the cause of the malfunction after restarting from the stoppage while the RUN LED is flickering.
3. To check during the normal operation or during the stoppage.
4. To monitor the inlet air temperature and the discharge air temperature.

Check mode
- Check mode 1: Current data will be displayed
- Check mode 2: The data which was held immediately before the failure will be displayed

Notes:
- The indication will delay as the transmission between the remote control switch and the indoor unit takes about ten seconds.
- All the data may be displayed as "FF" or " 1" or "255". These transient data, which are produced temporarily by the software, do not affect the device functions at all. (The alarm code may also be displayed as "FF".)
- If it is not indicated check mode 1, it has possibilities that the transmission between remote control switch and indoor unit is not connected

Normal mode

Pres "OK" for more than 3 seconds

Unit number and alarm code displayed

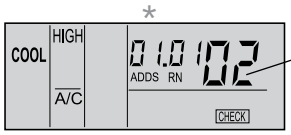

*

The alarm code that identifies the last fault that has occurred in the displayed unit.
The unit number of the connected unit or the unit number for which the checking mode was selected previously.
* ADDS: Number of the Indoor Unit in No. ** Cycle
RN: No. ** Refrigerant Cycle

After seven seconds ← (A)

Within seven seconds to check another unit

Forward:
Press the "⌃" switch to increase from 00 to 01 to 02 ···
Backward:
Press the "⌄" switch to decrease from 15 to 14 to 13 ···

Check mode 1

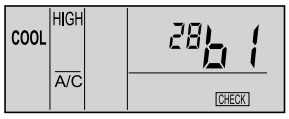

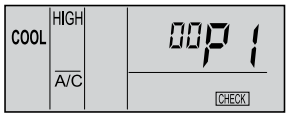

Press "⌄" to see the previous indication
Press "⌃" to see the next indication

Pres "OK" for more than 3 seconds

Unit number and alarm code displayed

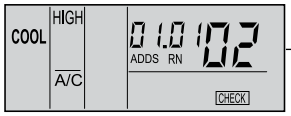

Press "⌃" to see the next data
Press "⌄" to see the previous data

After seven seconds ← See (A)

Check mode 2 (Refer to "Check mode 1" for details)

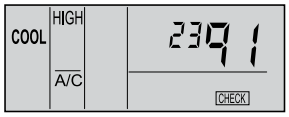

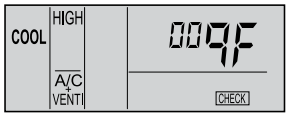

Press "⌃"

- In the Check mode 2, the data of the first three units that are connected serially to a remote control switch are available.
- You can press the "OK" switch to disable the Check mode 2. Check mode 1 cannot be disabled even if you press the "OK" switch.

Pres "OK" for more than 3 seconds

Check mode disabled

Все каталоги и инструкции здесь: https://splitsystema48.ru/instrukcii-po-ekspluatacii-kondicionerov.html

Although the wireless controller is used for the wall type indoor unit with the built-in receiver part, you can check the alarm code by connecting the PC-ART.

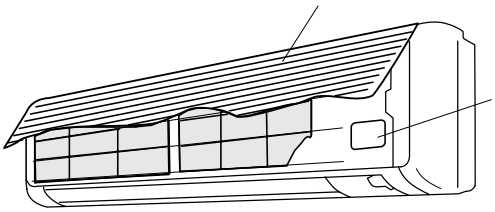

NOTES:

1. *The unit does not operate by pressing the operation switch.*
2. *The above function is available only when the alarm occurs.*
3. *The PCB check by means of the remote control switch is not available.*
4. *The indication is the data when you are connecting PC-ART. The indication is not the data before the alarm occurs.*

■ Contents of the Check mode 1

The next indication is shown if you press the part "△" of the TEMP switch.

If you press the part "▽" of the TEMP switch, the previous indication is shown.

Temperature indication

1	Indoor unit temp. setting (°C)	b1	22
2	Indoor unit air inlet temp. at thermistor (°C)	b2	20
3	Indoor unit discharge air temp. at thermistor (°C)	b3	55
4	Indoor unit heat exchanger liquid pipe temp °C	b4	20
5	Temperature at remote sensor (°C)	b5	25
6	Outdoor unit ambient temp. (°C)	b6	10
7	Indoor unit heat exchanger gas pipe temp. (°C)	b7	25
8	Outdoor unit evaporating temp. during heating (°C)	b8	02
9	Control information	b9	--
10	Discharge gas temp. at the top of the comp. chamber (°C)	bA	41
11	Thermo temp. of the remote control switch	bb	23

Indication of the category code
Indication of the temperature, etc

Normal ... Temperature displayed

Abormal
- -- (Thermistor is open-circuited or PCB is defective)
- or
- 129 (Temp. for top of comp.)
- FF (Thermistor is short-circuited or PCB is defective)
- or
- 255
- or
- 127 (Temp. for top of comp.)

Refer to section 7.3.1 “Self-Checking Procedure of PCB by means of the Remote Control Switch"

During the transient periods such as starting time and other, the indicators "--" or "00" may be displayed for a limited time.

This is indicated only when a remote sensor is connected.
The indicator "--" is normally displayed.
RPK series cannot connect a remote sensor.
Therefore, the indicator is "--".

This indicates the internal information for the remote control switch. In case of SET-FREE, this indication shows the operation compressor quantity-

(Ex.) During the operaton of several compressors, the average temperature of two compressors is indicated.

If the temperature is higher than 126 ºC, “ 126”

7

Все каталоги и инструкции здесь: https://splitsystema48.ru/instrukcii-po-ekspluatacii-kondicionerov.html

Indication of micro-computer input/output

12	Micro-computer input/ output in indoor unit	C1	4
13	Micro-computer input/ output in outdoor unit	C2	-

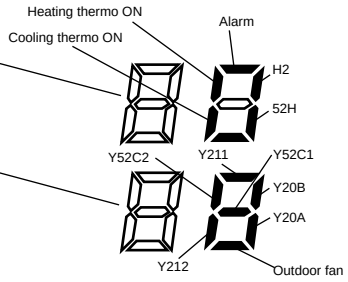

PCB Relay	Part name
H2	Relay for drain pump (MD) and/or dew heater (EHW).
52H	Relay for electric heater (CEH)
Y211	Relay for 4-way valve
Y52C1	Relay for compressor
Y20A	Relay for Selonoid Valve (SVA2)
Y20B	Relay for Selonoid Valve (SVA1)
Y20F	Relay for Selonoid Valve (SVF)
Outdoor Fan	Relay for Outdoor Fan.
YCH	Relay for Cranckcase heater

Indication of unit stoppage cause

14	Cause of stoppage	d1	01

00	Operation OFF, Power OFF
01	Thermo - OFF (Note 1)
02	Alarm (Note 2)
03	Freeze protection, overheating protection
05	Instantaneous power failure at outdoor unit, reset (Note 3)
06	Instantaneous power failure at indoor unit, reset (Note 4)
07	Stoppage of cooling process due to low outdoor temperature, stoppage of heating process due to high outdoor temperature
08	Compressor quantity changeover, stoppage (HP³8)
09	Demand of 4-way valve changeover stoppage (FX only)
10	Demand, enforced stoppage
11	Retry due to pressure ratio decrease
12	Retry due to low pressure increase
13	Retry due to high pressure increase
14	Retry due to abnormal current of constant speed compressor (HP>12)
15	Retry due to abnormal high temperature of discharge gas, excessive low suction pressure
16	Retry due to decrease of discharge gas superheat
17	Retry due to inverter tripping
18	Retry due to voltage decrease
19	Expansion valve opening change protection
20	Operation mode changeover of indoor unit (Note 5)

NOTE:

1. *Explanation of Terms*
   Thermo-ON: A condition where an indoor unit is requesting the compressor to operate.
   Thermo-OFF: A condition where an indoor unit is not requesting the compressor to operate.
2. *Even if stoppage is caused by "Alarm", "02" is not always displayed.*
3. *If the transmission between the inverter printed circuit board and the control printed circuit board is not performed during 30 seconds, the stoppage cause is d1-05 and the alarm code "04" may be displayed.*
4. *If the transmission between the indoor unit and the outdoor unit is not performed during three minutes, the Indoor Units are stopped. In this case, the stoppage cause is d1-06 and the alarm code "03" may be displayed.*
5. *In the system "20" will be indicated at the diference between indoor units.*

Abnormal operation occurrence counter

15	Abnormal operation occurrence counter	E1	01
16	Instantaneous power failure occurrence counter in indoor unit	E2	00
17	Transmission error occurrence counter between remote control switch and indoor unit	E3	00
18	Abnormal operation occurrence counter on inverter	E4	00

Countable up to 99.
Over 99 times, "99" is always displayed.

NOTE:

1. *If a transmission error continues for three minutes, one is added to the occurrence counter.*
2. *The memorized data can be cancelled by the method which is explained in section 7.3.1 "Self-checking Procedure of PCB by means of the Remote Control Switch".*

Indication of automatic louver condition

19	Louver sensor	F1	00

Все каталоги и инструкции здесь: https://splitsystema48.ru/instrukcii-po-ekspluatacii-kondicionerov.html

Compressor pressure/frequency indication

20	Discharge pressure (high) (x 0.1 MPa)	H1	18
21	Suction pressure (low) (x 0.01 MPa)	H2	04
22	Control information	H3	44
23	Operation frequency (Hz)	H4	44

This is an indication for internal information for the remote control switch. This does not have any specific meaning

This is an indication for frequency of inverter.

Indoor unit capacity indication

24	Indoor unit capacity	J1	08
25	Outdoor unit code	J2	Fn
26	Refrigerant cycle number	J3	01
27	Refrigerant cycle number	J4	00

The capacity of the indoor unit is indicated as shown in the table below.

Capacity code of indoor unit

Indication code	Equivalent capacity (HP)
06	0.8
08	1.0
10	1.3
13	1.5
14	1.8
16	2.0
18	2.3
20	2.5
22	2.8
26	3.0/3.5
32	4.0
40	5.0
48	6.0
64	8.0
80	10.0

"n" indicates the total number of Indoor Units:

1~9	A	b	C	d	E	F	U
1~9	10	11	12	13	14	15	16

J3: 01 ~ 16 (01: when shipment (DSW5), Decimal indication

J4: 00 ~ 0F (00: when shipment (DSW5), Indication with 16 numbers

Expansion opening indication

28	Indoor unit expansion valve opening (%)	L1	20
29	Outdoor unit expansion valve MV1 opening (%)	L2	99
30	Outdoor unit expansion valve MV2 opening (%)	L3	99

In case of models without the expansion valve (MV2), the same figure is displayed

Estimated electric current indication

31	Compressor Running Current (A)	P1	25

☛ Returns to **Temperature indication**

The total current is displayed when several compressors are running. In case of the inverter compressor, the running current of the primary side of the inverter is displayed.

Все каталоги и инструкции здесь: https://splitsystema48.ru/instrukcii-po-ekspluatacii-kondicionerov.html

■ **Contents of the Check mode 2**

When more than three indoor units are connected to one remote control switch, the latest data of only the first three indoor units that are connected serially are displayed.

If you press the part "⌃" of the TEMP switch, the next display appears. If you press the part "⌄" of the TEMP switch, the previous display appears.

Temperature indication

1	Indoor unit air inlet temp. at thermistor (°C)	91	29
2	Indoor unit discharge air temp. at thermistor (°C)	92	50
3	Indoor unit heat exchanger liquid pipe temp. (freeze protection) (°C)	93	25
4	Outdoor temperature (°C)	94	12
5	Indoor unit heat exchanger gas pipe temp. (°C)	95	25
6	Evaporating temp. at heating (°C)	96	03
7	Control information	97	--
8	Discharge gas temp. at the top of comp. chamber (°C)	98	45

Indication of the category code
Indication of the temperature, etc

Normal ... Temperature displayed

Abormal
- -- (Thermistor is open-circuited or PCB is defective)
- or
- 129 (Temp. for top of comp.)
- FF (Thermistor is short-circuited or PCB is defective)
- or
- 255
- or
- 127 (Temp. for top of comp.)

Refer to section "Self-Checking Procedure of PCB by means of the Remote Control Switch"

Notes:

1. *During the transient periods such as starting time and other, the indicator "--" may be displayed for a limited time.*
2. *All the data during the check mode 2 will be changed to "00" if a power failure occurs during alarm indication.*

This indicates the internal information for the remote control switch. This does not have any specific meaning

The average temperature of running compressors is indicated

Все каталоги и инструкции здесь: https://splitsystema48.ru/instrukcii-po-ekspluatacii-kondicionerov.html

Compressor pressure/frequency indication

9	Discharge pressure (high) (x 0.1 MPa)	99	18
10	Suction pressure (low) (x 0.01 MPa)	9A	04
11	Control information	9b	44
12	Operating frequency (Hz)	9C	44

This indicates the internal information for the remote control switch.
This does not have any specific meaning

This is an indication for frequency of inverter

Expansion opening indication

13	Indoor unit expansion valve opening (%)	9d	20
14	Outdoor unit expansion valve opening (%)	9E	99

Estimated electric current indication

15	Compressor running current (A)	9F	20

The total value is indicated when two compressors are running

☛ Returns to **temperature indication**

7

Все каталоги и инструкции здесь: https://splitsystema48.ru/instrukcii-po-ekspluatacii-kondicionerov.html

7.2.4. Troubleshooting by means of the 7 segment display

■ **Simple checking by 7-segment display**

1	Turn ON all Indoor Inits connected to the Outdoor Unit
2	Turn ON the Outdoor Unit
3	Auto-addressing starts

Outdoor Unit, Circuit Board,PCB1

During auto-addressing, the following items can be checked using the outdoor unit's on-board 7-segment LED display:

1 Disconnection of power supply to the indoor unit.

2 Reverse connection of the operating line between the outdoor and indoor units.

3 Duplication of indoor unit number.

■ **Checking method by 7-segment display**

Operating conditions and each part of refrigeration cycle can be checked by 7-segment disply and push switches (PSW) on the PCB1 in the Outdoor Unit. During checking data, do not touch the electric parts except for the indicated switches because 220-240V is applied to them. Pay attention not to contact the tools with electrical parts. If contacted, electrical parts will be damaged

PSW switches

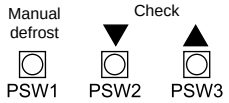

7-segments display

Checking `procedure:

– To start checking, press PSW2 switch for more than three seconds.

– To proceed checking (forward), press the PSW2 switch for less than two seconds.

– To go back to the previous item (backward), press the PSW3 switch for less than two seconds.

– To cancel this checking, press the PSW2 switch for more than 3 seconds. The dfisplay will change to the indication one step before. Then press the PSW2 switch once again for more than three seconds.

CAUTION

Make sure that the checking mode is cancelled after the checking. Otherwise you may cause a malfunction.

No.	Item	Indication			Data	Values	Units
01	Output state of micro-computer		5	C	(see figure below)	(see table below)	

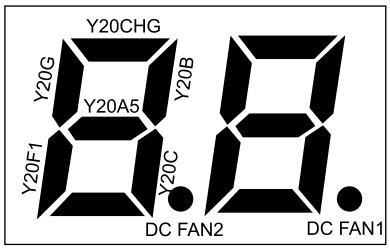

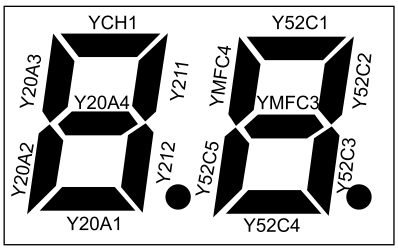

PCB Relay	Part name
Y20A1~A5	Relay for solenoid valve (SVA1~5)
Y20B Y20C Y20G Y20CHG Y20F1	Relay for solenoid valve (SVB/C/G/CHG/F1)
Y52C1~5	Relay for compressor
Y211 Y212	Relay for 4-way valve
YCH1	Relay for crankcase heater
DC FAN1, 2	Relay for 1st and 3rd fan at inverter speed
YMFC3, 4	Relay for 2nd and 4th fan at constant speed

Все каталоги и инструкции здесь: https://splitsystema48.ru/instrukcii-po-ekspluatacii-kondicionerov.html

Note:
Shadowed items are applicable only to FSN2 series

No.	Item	Indication			Data			Values	Units
02	Total of Thermo-ON indoor unit capacity		o	P	3	2	0	0 ~ 9999	x1/8 HP
03	Running frequency of inverter compressor MC1		H	1		7	4	0 ~ 115	Hz
04	Number of running compressors		C	C			5	0 ~ 5	
05	Air flow rate		F	o		1	6	0 ~ 16	(Fan step)
06	Outdoor expansion valve MV1 opening	o	E	1		4	2	0 ~ 100	%
07	Outdoor expansion valve MV2 opening (for 14 to 48HP)	o	E	2		4	2	0 ~ 100	%
08	Outdoor expansion valve MV3 opening (for 26 to 48HP)	o	E	3		4	2	0 ~ 100	%
09	Outdoor expansion valve MV4 opening (for 44 to 48HP)	o	E	4		4	2	0 ~ 100	%
10	Outdoor expansion valve MVB opening	o	E	b		1	3	0 ~ 100	%
11	Discharge pressure (high)		P	d	2.	8	0	-0.55 ~ 5.52	MPa
12	Suction pressure (low)		P	5	0.	6	0	-0.22 ~ 2.21	MPa
13	Discharge gas temp. on the top of compressor MC1 (TD1)	r	d	1		8	2	1 ~ 142	ºC
14	Discharge gas temp. on the top of compressor MC2 (TD2) (for 14 to 48HP)	r	d	2		8	5	1 ~ 142	ºC
15	Discharge gas temp. on the top of compressor MC3 (TD3) (for 18 to 48HP)	r	d	3		8	0	1 ~ 142	ºC
16	Discharge gas temp. on the top of compressor MC4 (TD4) (for 30 to 48HP)	r	d	4		8	2	1 ~ 142	ºC

Все каталоги и инструкции здесь: https://splitsystema48.ru/instrukcii-po-ekspluatacii-kondicionerov.html

No.	Item	Indication			Data			Values	Units
17	Discharge gas temp. on the top of compressor MC5 (TD5) (for 38 to 48HP)	r	d	5		8	4	1 ~ 142	ºC
18	Evaporating temperature TE1 at heating	r	E	1			2	-46 ~ 80 (-127 = Open circuited) (127 = Short circuited)	ºC
19	Evaporating temperature TE2 at heating (for 14 to 48HP)	r	E	2			2	-46 ~ 80 (-127 = Open circuited) (127 = Short circuited)	ºC
20	Evaporating temperature TE3 at heating (for 26 to 48HP)	r	E	3			2	-46 ~ 80 (-127 = Open circuited) (127 = Short circuited)	ºC
21	Evaporating temperature TE4 at heating (for 44 to 48HP)	r	E	4			2	-46 ~ 80 (-127 = Open circuited) (127 = Short circuited)	ºC
22	Ambient temperature (Ta)		r	o			7	-46 ~ 80 (-127 = Open circuited) (127 = Short circuited)	ºC
23	Auto-Charge temperature	r	C	H		3	0	-46 ~ 80 (-127 = Open circuited) (127 = Short circuited)	ºC
24	Supercooling temperature	r	5	C		1	5	-46 ~ 80 (-127 = Open circuited) (127 = Short circuited)	ºC
25	Estimated running current of compressor MC1		A	1		2	0	000 ~ 255	A
26	Estimated running current of compressor MC2 (for 14 to 48HP)		A	2		3	1	000 ~ 255	A
27	Estimated running current of compressor MC3 (for 18 to 48HP)		A	3		3	1	000 ~ 255	A
28	Estimated running current of compressor MC4 (for 30 to 48HP)		A	4		3	1	000 ~ 255	A
29	Estimated running current of compressor MC5 (for 38 to 48HP)		A	5		3	1	000 ~ 255	A
30	Indoor unit expansion valve opening (from 0 to 63)	ı	E	00		4	5	0 ~ 100	%
		~			~				
		ı	E	63			2		

Все каталоги и инструкции здесь: https://splitsystema48.ru/instrukcii-po-ekspluatacii-kondicionerov.html

No.	Item	Indication	Data	Values	Units
31	Indoor unit heat exchanger liquid pipe temperature (freeze protection) (from 0 to 63)	rL00 ~ rL63	35 ~ 25	-62 ~ 127	ºC
32	Indoor unit heat exchanger gas pipe temperature. (from 0 to 63)	rG00 ~ rG63	50 ~ 48	-62 ~ 127	ºC
33	Indoor unit air inlet temperature. (from 0 to 63)	r,00 ~ r,63	20 ~ 23	-62 ~ 127	ºC
34	Indoor unit discharge air temperature. (from 0 to63)	ro00 ~ ro63	40 ~ 30	-62 ~ 127	ºC
35	Indoor unit capacity setting. (from 0 to 63)	CA00 ~ CA63	32 ~ 16	(No.0 Unit) 6 ~ 160 (No. 63 Unit) 6 ~ 160	x1/8HP
36	Indoor unit cause of stoppage. (from 0 to 63)	d100 ~ d163	0 ~ 1	(No.0 Unit) 0 ~ 99 (No. 63 Unit) 0 ~ 99	
37	Pressure ratio fall protection degeneration control	c11	0	0: not in operation 1: in operation	
38	High pressure rise protection degeneration control	c13	1	0: not in operation 1: in operation	
39	Inverter fin temperature increase protection degeneration control	c14	0	0: not in operation 1: in operation	

Все каталоги и инструкции здесь: https://splitsystema48.ru/instrukcii-po-ekspluatacii-kondicionerov.html

No.	Item	Indication			Data			Values	Units
40	Discharge gas temp. decrease protection degeneration control	c	1	5			0	0: not in operation 1: in operation	
41	Discharge gas temp. increase protection degeneration control	c	1	6			0	0: not in operation 1: in operation	
42	Current protection degeneration control	c	1	7			0	0: not in operation 1: in operation	
43	Total accumulated hours of compressor MC1	U	J	1	2	1	9	0 ~ 9999	x10 times hours
44	Total accumulated hours of compressor MC2 (for 14 to 48HP)	U	J	2	2	1	9	0 ~ 9999	x10 times hours
45	Total accumulated hours of compressor MC3 (for 18 to 48HP)	U	J	3	2	1	9	0 ~ 9999	x10 times hours
46	Total accumulated hours of compressor MC4 (for 26 to 48HP)	U	J	4	2	1	9	0 ~ 9999	x10 times hours
47	Total accumulated hours of compressor MC5 (for 44 to 48HP)	U	J	5	2	1	9	0 ~ 9999	x10 times hours
48	Total accumulated hours of compressor MC1	cU	J	1	2	1	9	0 ~ 9999	x10 times hours
49	Total accumulated hours of compressor MC2 (for 14 to 48HP)	cU	J	2	2	1	9	0 ~ 9999	x10 times hours
50	Total accumulated hours of compressor MC3 (for 18 to 48HP)	cU	J	3	2	1	9	0 ~ 9999	x10 times hours
51	Total accumulated hours of compressor MC4 (for 26 to 48HP)	cU	J	4	2	1	9	0 ~ 9999	x10 times hours
52	Total accumulated hours of compressor MC5 (for 44 to 48HP)	cU	J	5	2	1	9	0 ~ 9999	x10 times hours
53	The latest alarm code cause of stoppage at outdoor unit		A	C		0	1	0 ~ 99	
54	Cause code of stoppage at inverter	,	F	C			2	0 ~ 16	
55	Cause code of stoppage at fan motor controller 1	F	F	C1			0	0 ~ 16	
56	Cause code of stoppage at fan motor controller 2	F	F	C2		1	1	0 ~ 16	

Все каталоги и инструкции здесь: https://splitsystema48.ru/instrukcii-po-ekspluatacii-kondicionerov.html

No.	Item		Indication	Data	Values	Units
57	Failure history	(Hystory No. 1) The latest failure	n o 01	77	Integrated hours at alarm in indicated	Indication is automatically switched in every 1 second
		(Hystory No. 2)	n o 02	A C 48	Cause of stoppage	
			~	, r 2	ITC indication	
		(Hystory No. 15) The oldest failure	n o 15	F 1 --	FTC indication	
58	Total capacity setting of indoor unit		C P	3 6 0	0 ~ 9999	x1/8HP
59	Total quantity of combined indoor unit		A A	B	0 ~ 64	units
60	Address of refrigerant system		C A	0	0 ~ 63	
				Return to Start "SC"		

■ **Reset for accumulated operation time of compressor 1-5 after maintenance (cUJ1-cUJ5)**

Procedure

Press PSW1 for 5 seconds while the accumulated operation time of compressor data is displayed.

Example of compressor 1

PSW2 ↑↓ PSW3

c	U	J	1	"cUJ1" (Accumulated operation time of compressor 1) will be indicated

PSW2 ↑↓ PSW3

	B	1	6	"Press PSW1 for 5 sec. while the accumulated operation time is displayed

↓

The indication will be changed to "0"
(The accumulated operation time of compressor 1 is "0"

			0

7

Все каталоги и инструкции здесь: https://splitsystema48.ru/instrukcii-po-ekspluatacii-kondicionerov.html

7.2.5. Running current of the compressor

■ **Inverter primary current**

The inverter primary current is estimated from the running current of the compressor MC1 displayed on the 7 segment display, as chart.

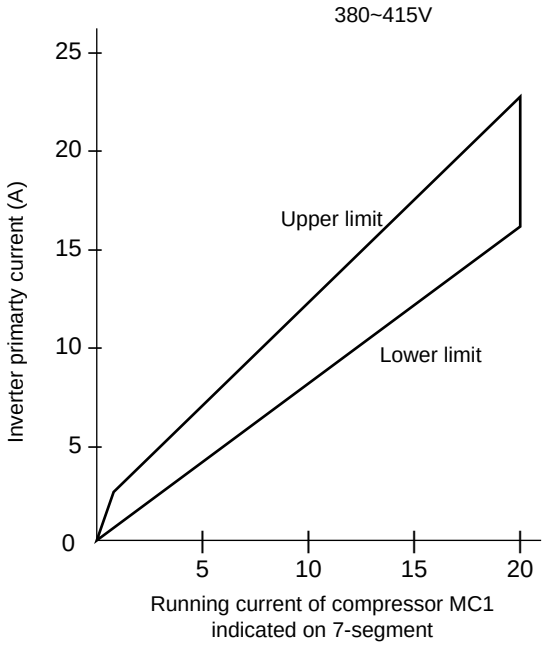

■ **Displayed running current of the compressor MC2, MC3, MC4, MC5**

The running current of the compressor MC2, MC3, MC4, MC5 is detected by the current sensor. (CT2 ~ CT5)

Cause code of stoppage for the inverter (content of check item " dCC")

Code	Cause	Cause of stoppage for correspondign unit	Remark	
			Indication during retry	Alarm code
1	Automatic stoppage of the transistor module (IPM Error) (overcurrent, decrease voltage, increase temperature)	17	P 17	53
2	Instantaneous overcurrent	17	P 17	48
3	Abnormal inverter fin thermistor	17	P 17	54
4	Electronic thermal activation	17	P 17	48
5	Inverter voltage decrease (Insufficient Voltage)	18	P 18	06
6	Voltage increase	18	P 18	06
7	Abnormal transmission	18	-	04
8	Abnormal current sensor	17	P 17	51
9	Instantaneous power failure detection	18	-	-
11	Reset of micro-computer for inverter	18	-	53
12	Earth fault detection for compressor (only starting)	17	P 17	04,53
13	Abnormal power source phase	18	-	-
16	Inverter retry	18	P 18	55

Все каталоги и инструкции здесь: https://splitsystema48.ru/instrukcii-po-ekspluatacii-kondicionerov.html

Cause code of stoppage for Fan Controller (content of check item "FFC")

Code	Cause
1	Automatic stoppage of the transistor module (IPM Error) (overcurrent, decrease voltage, increase temperature)
2	Instantaneous overcurrent
3	Abnormal inverter fin thermistor
4	Electronic thermal activation
5	Inverter voltage decrease (Insufficient Voltage)
6	Voltage increase
7	Abnormal Inverter transmission
11	Reset of micro-computer for inverter
13	Abnormal power source phase
14	Abnormality of detection for fan motor position
16	Fan controller retry

Все каталоги и инструкции здесь: https://splitsystema48.ru/instrukcii-po-ekspluatacii-kondicionerov.html

7.2.6. Protection control code on the 7-segment display

1. Protection control code is displayed on 7-segment when a protection control is activated.
2. Protection control code is displayed while function is working, and goes out when released.
3. When several protection control are activated, code number with higher priority will be indicated (see below for the priority order).
   – Higher priority is given to protection control related to frequency control than the other.

Priority	Protection control
1	Pressure ratio control
2	High-pressure rise protection
3	Current protection
4	Inverter fan temperature rise protection
5	Discharge gas temperature rise protection
6	Low-pressure fall protection
7	4-way valve switching control
8	Low-pressure rise protection

Priority	Protection control
9	Demand current control (running current limit control)
10	High-pressure fall protection
11	Oil return control
12	TdSH fall protection FSN2: Discharge gas superheat decrease protection

   – In relation to retry control, the latest retrial will be indicated unless a protection control related to frequency control is indicated.

Code	Protection control
P01	Pressure ratio control (*)
P02	High pressure rise protection (*)
P03	Inverter current protection (*)
P04	Inverter fin temp rise protection
P04.	Fan motor controller fin temperature increase protection (*)
P05	Discharge gas temperature increase protection (*)
P06	Low pressure decrease protection
P07	Reversing valve switching control
P08	Oil return control
P09	High pressure decrease protection
P0A	Demand current control (Running current limit control)
P0C	Dicharge gas SUPERHEAT decrease protection (*)

Code	Protection control
P0d	Low pressure increase protection (*)
P11	Pressure ratio decrease retry
P12	Low pressure increase retry
P13	High pressure increase retry
P14	Overcurrent retry of constant speed compressor
P15	Vacuum/discharge gas temperature increase retry
P16	Discharge gas SUPERHEAT decrease retry
P17	Inverter trip retry
P17.	Fan motor controller trip retry
P18	Insuffcient voltage/excessive voltage retry
P26	Hifh pressure decrease retry
P27	Fan motor protection device retry

In the case that degeneration control is activated, C is indicated instead of 0 (* mark)

- The retry indication continues for 30 minutes unless a protection control is displayed.
- The retry indication disappears if the stop signal comes from all the rooms.

NOTE:
The protection control code that is displayed on the 7 segment display changes to an alarm code when the abnormal operation occurs. Also, the same alarm code is displayed on the remote control switch.

Все каталоги и инструкции здесь: https://splitsystema48.ru/instrukcii-po-ekspluatacii-kondicionerov.html

7.2.7. Activating condition of the protection control code

To monitor the conditions such as the temperature change and others, the control of the frequency and other controls are performed by the protection control in order to prevent the abnormal operations. The activating conditions of the protection control are shown in the table below:

Note:
Shadowed items are applicable only to FSN2 series

Code	Protection control	Activating condition	Remarks
P01	Pressure ratio control	Compression ratio ≥ 9 → Frequency decrease (Pd+0.1(Ps+0.06)) ≤ 2.2 → Frequency increase	Ps: Suction pressure of compressor [Mpa] Pd: Discharge pressure of compressor [Mpa]
P02	High-pressure increase protection	Pd ≥ 3.6 Mpa (36kgf/cm² G)→ Frequency decrease	
P03	Inverter current protection	Inverter output current ≥ 23.5A (380-415V) → Frequency decrease	-
P04	Inverter fin temp. increase protection	Inverter fin temp. ≥ 89°C → Frequency decrease	-
P04.	Fan motor controller fin temperature increase protection	Fan motor controller fin temperature ≥ 100 ºC	
P05	Discharge gas temperature increase protection	Temperature at the top of compressor is high → Frequency decrease (Maximum temperature is different depending on the frequency)	-
P06	Low-pressure decrease protection	Low-pressure is excessively low→ Frequency decrease (Minimum pressure is different depending on the ambient temperature)	-
P07	Reversing valve switching control	When switching ΔP<1.0MPa → Frequency increase ΔP>1.3MPa → Frequency decrease	ΔP = Pd - Ps
P08	Oil return control	Frequency less than (a) is maintained for more than1 hour → Frequency ≥ (a)	(a) Cooling operation: 75 Heating operation: 84
P09	High-pressure decrease protection	Discharge pressure of compressor decrease → Frequency increase	
P0A	Demand current control (Running current imit control)	Compressor run current ≥ Demand setting value → Frequency decrease	Demand current setting value: Upper limit of total running current is set to 80%, 70%, 60% at normal operation using input on PCB1
P0C	Discharge gas SUPERHEAT decrease protection	Temperature of discharge gas is low (Td1 < Pd saturation temperature + 15 ºC) → Frequency increase (Frequency is different depending on temperature of discharge gas)	
P0d	Low-pressure increase protection	Low pressure ≥ 1.3MPa → Frequency increase	
P11	Pressure ratio decrease retry	Compression ratio (Pd+0.1/(Ps+0.06)≤1.8)	When it activates three times in 30 minutes, the alarm code “43” is displayed
P12	Low-pressure increase retry	Ps>1.5MPa	When it activates three times in 30 minutes, the alarm code “44” is displayed
P13	High-pressure increase retry	Pd>3.8MPa	When it activates three times in 30 minutes, the alarm code “45” is displayed
P14	Overcurrent retry of constant speed compressor	Current ≥ Maximum value (*1), or Current<1.0A	When it activates three times in 30 minutes, the alarm code “39” is displayed

Все каталоги и инструкции здесь: https://splitsystema48.ru/instrukcii-po-ekspluatacii-kondicionerov.html

Code	Protection control	Activating condition	Remarks
P 15	Vacuum/discharge gas temperature increase retry	In Case of Ps<0.09MPa for over 12 minutes, or discharge gas temperature ≥ 132°C for over ten minutes or discharge gas temperature ≥ 140 °C for over five seconds	When it activates three times in one hour, the alarm codes “47” (Ps) or “08” (Discharge gas) are displayed
P 16	Discharge gas SUPERHEAT decrease retry	Discharge gas SUPERHEAT less than ten (10) degrees is maintained for 30 minutes	When it activates three times in two hours, the alarm code “07” is displayed
P 17	Inverter trip retry	Automatic stoppage of transistor module, activation of electronic thermal or abnormal current sensor	When activating three times in 30 minutes, “48”, “51” and “53” alarm is indicated
P 17.	Fan motor controller trip retry	Automatic stoppage of fan controller (Electronic thermal activation or Micro-computer reset)	
P 18	Insufficient voltage/ excessive voltage retry	Insufficient/excessive voltage at the inverter circuit or CB connector part	When it activates three times in 30 minutes, the alarm code “06” is displayed
P26	High pressure decrease retry	Pd < 1.00MPa for 1 hour	No alarm
P27	AC fan motor protection device retry	Activation of internal thermostat of outdoor AC fan motor	When it activates three times in 30 minutes, the alarm code “09” is displayed

Ps: Suction pressure of compressor
Pd: Discharge pressure of compressor

NOTE:

During the protection control (except during the alarm stoppage), the protection control code is displayed.

The protection control code is displayed during the protection control and turns off when you are canceling the protection control.

After the retry control, the condition of monitoring continues for 30 minutes.

*The maximum current value of constant compressor (*1) is as follows:*

Power source: 380-415V/50Hz

Model	Maximum current value (A)			
	MC2	MC3	MC4	MC5
RAS-14, 16FSN2	15.5	-	-	-
RAS-18, 20FSN2	15.5	15.5	-	-
RAS-22, 24FSN2	15.5	26.0	-	-
RAS-26, 28FSN2	26.0	26.0	-	-
RAS-30 to 36FSN2	26.0	26.0	15.5	-
RAS-38 to 42FSN2	26.0	26.0	15.5	26.0
RAS-44 to 48FSN2	26.0	26.0	26.0	26.0

Все каталоги и инструкции здесь: https://splitsystema48.ru/instrukcii-po-ekspluatacii-kondicionerov.html

7.3. Procedure for checking each main part

7.3.1. Self-checking procedure of PCB by means of the Remote Control Switch

Use the following troubleshooting procedure for testing the PCB in the indoor unit and the outdoor unit:

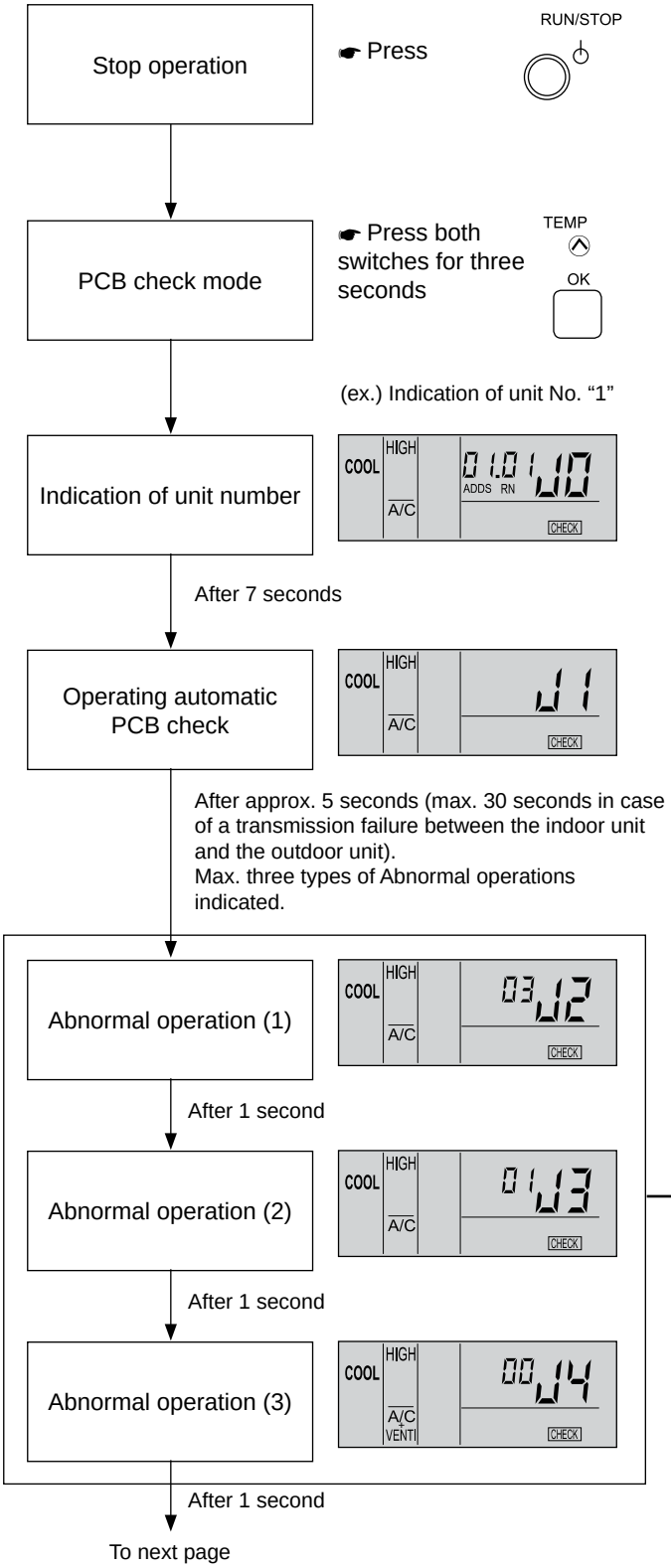

Indi-cation	Contents	
00	Normal	
Abnormality (open-circuit, short-circuit, etc.) in circuit for:		
01	Air inlet temp. thermistor	Indoor unit PCB
02	Discharge air. temp. thermistor	Indoor unit PCB
03	Liquid pipe temp. thermistor	Indoor unit PCB
04	Remote thermistor abnormality	Indoor unit PCB
05	Gas pipe temp. thermistor	Indoor unit PCB
06	Remote sensor	Indoor unit PCB
08	Transmission of central station	Indoor unit PCB
0A	EEPROM	Indoor unit PCB
0b	Zero cross input failure	Indoor unit PCB
EE	Transmission of indoor units during this checking operation	Indoor unit PCB
07	Transmission of outdoor unit	Outdoor unit PCB
F4	ITO input failure	Outdoor unit PCB
F5	PSH input failure	Outdoor unit PCB
F6	Protection signal detection circuit	Outdoor unit PCB
F7	Phase detection	Outdoor unit PCB
F8	Transmission of inverter	Outdoor unit PCB
FA	High-pressure sensor	Outdoor unit PCB
Fb	Comp. discharge gas temp. thermistor	Outdoor unit PCB
FC	Low-pressure sensor	Outdoor unit PCB
Fd	Heat exchanger evaporation temp. thermistor	Outdoor unit PCB
FF	Ambient air temp. thermistor	Outdoor unit PCB

Все каталоги и инструкции здесь: https://splitsystema48.ru/instrukcii-po-ekspluatacii-kondicionerov.html

If you are using a wireless remote control switch with the built-in receiver part of the wall-type indoor unit and you need to perform the above checking, perform the following procedure:

1. Turn OFF the power supply.
2. Disconnect the connector (CN25) on PWB(M).
3. Connect the PC-P1HE.
4. Turn ON the power supply.

After finishing the checking, turn OFF the power supply again and reconnect the connectors according to the previous situation before the checking.

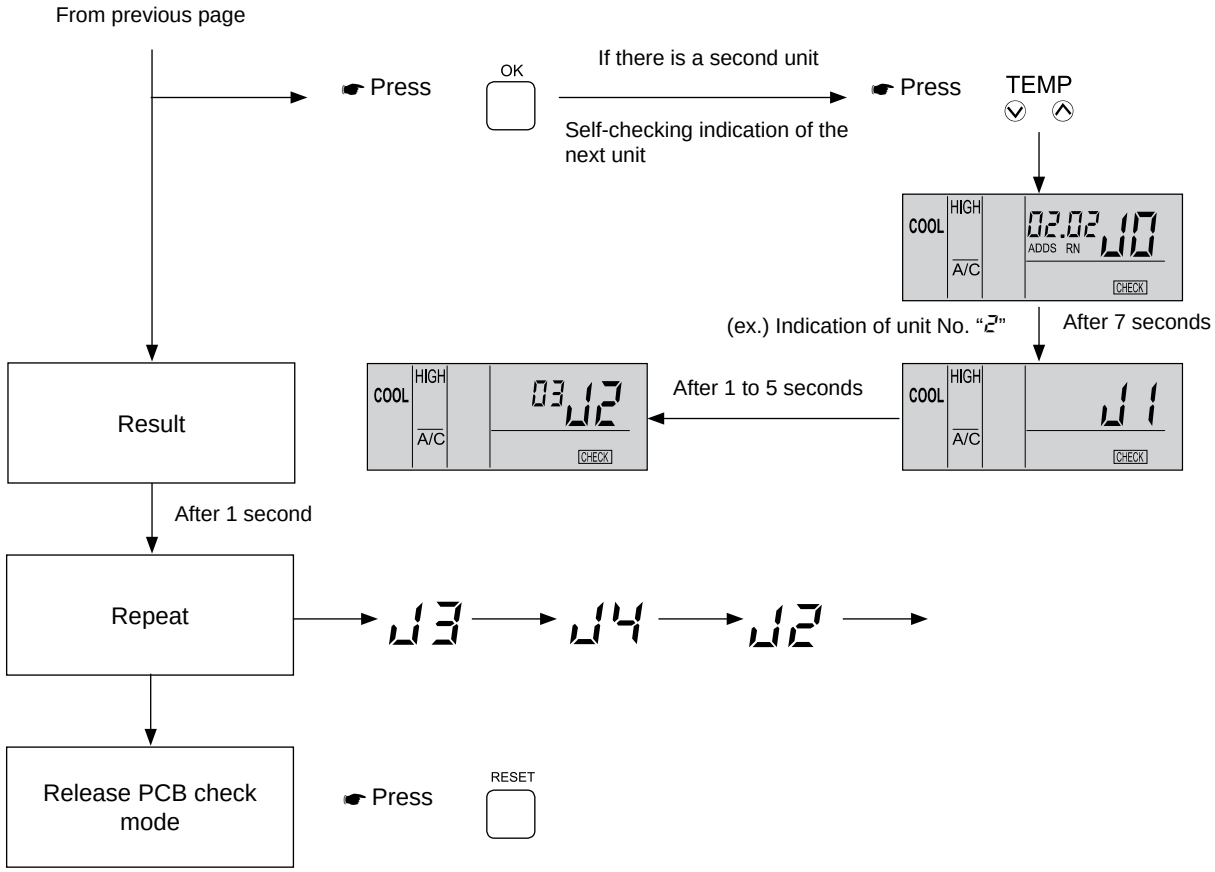

NOTE:

1. *If this indication continues and the alarm code "J1" is not displayed, this means that each one of indoor unit is not connected to the remote control switch.*
   Check the wiring between the remote control switch and the indoor unit.

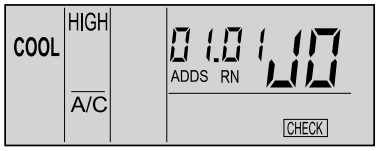

2. *In this troubleshooting procedure, checking of the following parts of the PCB is not available.*

   PCB in Indoor Unit: Relay circuit, DIP switch, option circuit, fan circuit, protection circuit.

   PCB in Outdoor Unit: Relay circuit, DIP switch, option circuit.

3. *If this troubleshooting is performed in the system by means of the central station, the indication of the central station may change during this procedure. However, this is not abnormal.*

Все каталоги и инструкции здесь: https://splitsystema48.ru/instrukcii-po-ekspluatacii-kondicionerov.html

7.3.2. Self-Checking procedure of the Remote Control Switch

Cases where the CHECK switch is used:

1. If the remote control switch displays a malfunction.
2. For the regular maintenance check.

1	Turn ON the power source
2	Simultaneously press the following three switches. (During the operation, you can press the switches.) TEMP MODE
3	The LCD changes as shown in the right figure.
4	After the LCD changes as shown in the right figure, the RUN indicator flickers twice.
5	The LCD changes as shown below. Press all the switches (13 switches) one by one. Every time you press the switch, the number of the indication of the part (A) in the figure below increases one.
6	The LCD changes as shown below. The remote control switch automatically starts to check the transmission circuit

No.	LCD Indication	Indicating period (sec.)
1	HIGH COOL DRY TEMP. ABNL	1
2	MED HEAT A/C DEFROST CENTRAL °C FILTER	1
3	LOW H.STRG ADDS RN HR NO FUNCTION SERVICE UNIT	1
4	FAN AUTO VENTI SWING LOUVER ON OFF TIMER SET TEMP. T.RUN CHECK	1
5	FAN COOL HEAT DRY AUTO HIGH MED LOW A/C VENTI SWING LOUVER DEFROST CENTRAL H.STRG ON OFF TIMER SET TEMP. °C ADDS RN HR NO FUNCTION SERVICE UNIT ABNL FILTER T.RUN CHECK	3

Only for the cancellation of EEPROM, press the following three switches simultaneously during the changes of the LCD.

TEMP MODE

To 11

NOTE:

1 *Unless all the switches are pressed, the checking does not proceed to the next item.*

2 *You can press the switches in any order.*

3 *Pressing two or more switches simultaneously is invalid and not counted.*

NOTE:

1 *In case that the transmission circuit is abnormal, the LCD remains as shown in the left figure and the checking does not proceed to the next item.*

Все каталоги и инструкции здесь: https://splitsystema48.ru/instrukcii-po-ekspluatacii-kondicionerov.html

7	The LCD indication changes as shown below. The detected temperature of the remote control thermostat is displayed at the (A) part in the figure below. A 20 04

If the indicators "--" or "FF" are displayed at the "A" part, the remote control thermostat is abnormal.

8	The LCD changes as shown below. 05

If you press the RESET switch or you leave the switches for 15 seconds, the data of EEPROM (storage cell inside of the remote control switch) is cleared. At this time, the number is displayed at the (A) part, which is shown in the figure below. When the number "99" is displayed, EEPROM is abnormal.

A
00 05

9	The LCD changes as shown below. 06 After several seconds have passed, the remote control switch is automatically activated again.

If the number which is displayed at the (A) part is "99", the checking does not proceed to the next item.

10	When the remote control switch is activated again, the RUN indicator is ON and the operation is started. Therefore, press the RUN/STOP switch and stop the operation. RUN/STOP

NOTE:

1. *In case that the operation is not automatically started when the remote control switch is activated again, the detection circuit for the momentary stoppage may be abnormal. However, the detection circuit will not interfere with the normal operation.*
2. *There is a case where the operation is automatically stopped after the automatic operation* when the remote control switch is activated again.

Cancellation of EEPROM
(from step 3)

11	The LCD indication changes as shown below and the remote control switch automatically cancels the EEPROM. 07

12	.The LCD changes as shown below 08 After several seconds have passed, the remote control switch is automatically activated again. In this case, the operation is not started automatically.

Все каталоги и инструкции здесь: https://splitsystema48.ru/instrukcii-po-ekspluatacii-kondicionerov.html

7.3.3. Self-Checking procedure of the Indoor Unit PCB (only for RPK)

■ **Self-checking procedure by means of the relays on the indoor unit PCB**

– To check the abnormal operation on the indoor unit PCB due to a malfunction.

– To check the abnormal operation on the indoor unit PCB according to the results of the checking procedure by means of the CHECK switch on the remote control switch and the self-checking function.

■ **Procedure**

1 Turn OFF the main power switch.

2 Disconnect the connectors CN7 and CN8.

3 Set the DIP switch DSW2 as shown below.

Set the #1 switch to ON and #2 switch to OFF

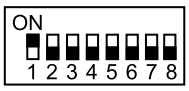

DIP Switch DSW2

4 Turn ON the main power switch.
Check Mode starts. (Refer to the next page.)
A Analog Test
B Relay Test

5 After finishing the self-checking procedure, turn OFF the power and reset the DIP switch as before.

Self-checking procedures in the check mode for RPK-FSNM

Check item	State of mode		Confirmation method
(A) Initialize Exp. valve and auto-louver ↓	Exp. Valve fully open → fully closed Auto-louver is horizontally stopped.		
(B) Analog test ↓	If the thermistors for the inlet air temperature, for the discharge air temperature and for the freeze protection are normal, proceed to the next step.		
(C) Each relay test Perform repeatedly ↓	52H1, 2, 3 Fan (Low) Wireless receiver part (Red) Wireless receiver part (Green) Wireless receiver part (Yellow)	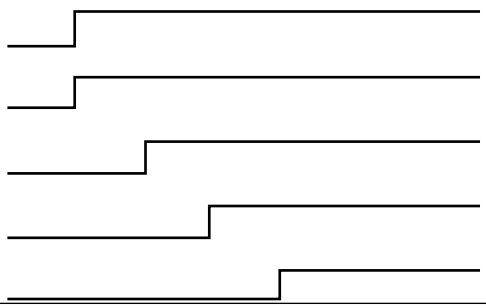	Check the ON/OFF sound of the relays and the LED.
Termination	Turn OFF and reset all the DIP switches as before.		

7

Все каталоги и инструкции здесь: https://splitsystema48.ru/instrukcii-po-ekspluatacii-kondicionerov.html

7.3.4. Procedure of checking other main parts

■ **High voltage discharge work for replacing parts**

WARNING

Perform this high voltage discharge work to avoid an electric shock

Procedure:

a. Turn OFF the main switches and wait for three minutes. Check to ensure that no high voltage exists. If LED201 is ON after start-up and LED201 is OFF after turning OFF power source, the voltage will decrease lower than DC50V.

b. Connect connecting wires to an electrical soldering iron.

c Connect the wires to terminals, P and N on IPM. => Discharging is started, resulting in hot soldering iron. Pay attention not to short-circuit between terminal P and N

d. Wait for 2 or 3 minutes and measure the voltage once again. Check to ensure that no voltage is charged.

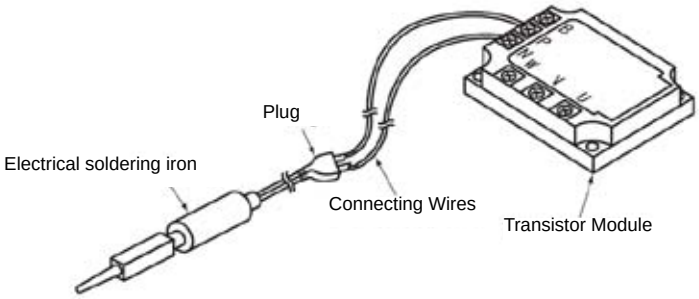

■ **Checking Method of Transistor Module**

Outer Appearance and Internal Circuit of Transistor Module

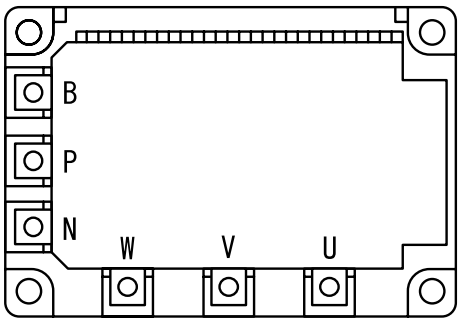

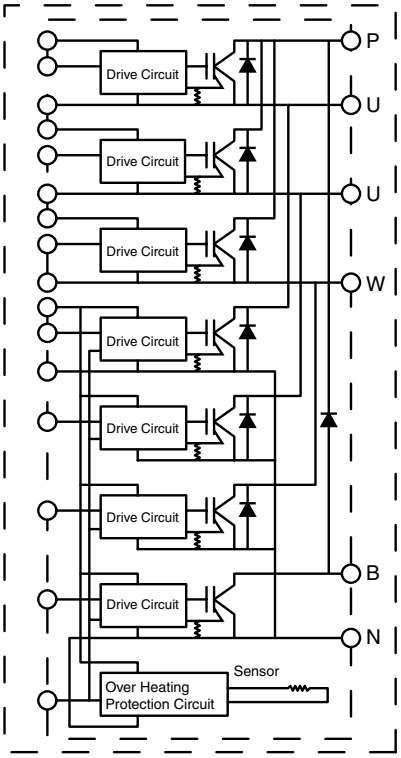

Все каталоги и инструкции здесь: https://splitsystema48.ru/instrukcii-po-ekspluatacii-kondicionerov.html

■ Checking procedure for transistor module (IPM)

Remove all the terminals of the transistor module before check. If items (a) to (d) are performing and the results are satisfactory, the transistor module is normal. Measure it under 1kΩ range of a tester.

CAUTION:
Perform the high voltage discharge procedure as described
Do not use a digital tester.

a. By touching the + side of the tester to the P terminal of transistor module and the - side of tester to U, V and W of transistor module, measure the resistance. If all the resistances are from 1 to 5kΩ, it is normal.

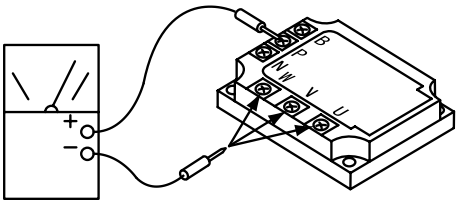

b. By touching the - side of the tester to the P terminal of transistor module and the + side of tester to U, V and W of transistor module, measure the resistance. If all the resistances are greater than 100kΩ, it is normal.

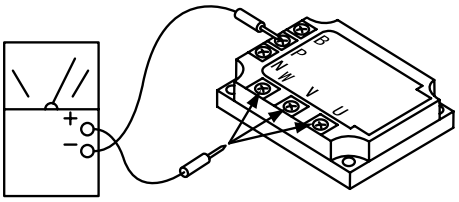

c. By touching the - side of the tester to the N terminal of transistor module and the + side of tester to U, V and W of transistor module, measure the resistance. If all the resistances are from 1 to 5kΩ, it is normal.

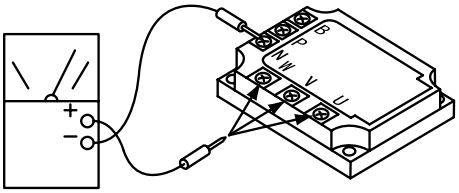

d. By touching the + side of the tester to the N terminal of transistor module and the - side of tester to U, V and W of transistor module, measure the resistance. If all the resistances are greater than 100kΩ, it is normal.

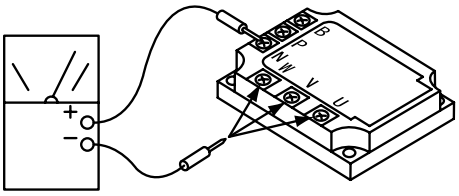

Все каталоги и инструкции здесь: https://splitsystema48.ru/instrukcii-po-ekspluatacii-kondicionerov.html

■ Checking procedure for diode module.

Outer appearance and internal circuit of diode module

CAUTION:
Do not use a digital tester.

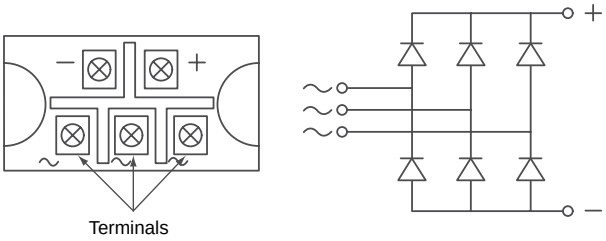

Remove all the terminals of the diode module before check. If items (a) to (d) are performing and the results are satisfactory, the transistor module is normal. Measure it under 1kΩ range of a tester.

(a) By touching the + side of the tester to the + terminal of diode module and the - side of tester to the ~ terminals (3 NOs.) of the diode module, measure the resistance. If all the resistances are from 5 to 50kΩ, it is normal.

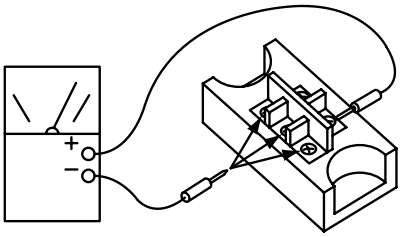

(b) By touching the - side of the tester to the + terminal of diode module and the + side of tester to the ~ terminals (3 NOs.) of the diode module, measure the resistance. If all the resistances are greater than 500kΩ, it is normal.

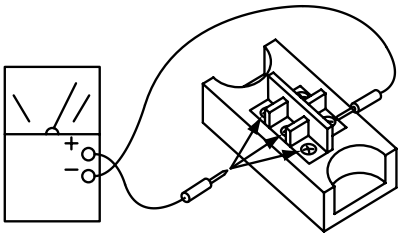

(c) By touching the - side of the tester to the - terminal of diode module and the + side of tester to the ~ terminals (3 NOs.) of the diode module, measure the resistance. If all the resistances are from 5 to 50kΩ, it is normal.

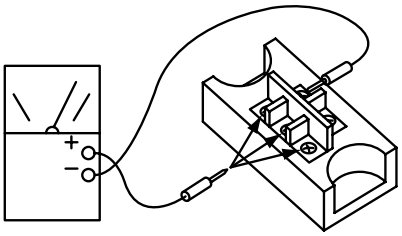

(d) By touching the + side of the tester to the - terminal of diode module and the - side of tester to the ~ terminals (3 NOs.) of the diode module, measure the resistance. If all the resistances are greater than 500kΩ, it is normal.

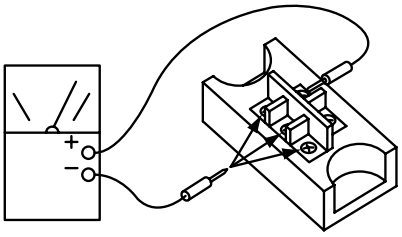

Все каталоги и инструкции здесь: https://splitsystema48.ru/instrukcii-po-ekspluatacii-kondicionerov.html

■ Checking of Fan Module

Before this work, check to ensure that LED201 (Red) of the PCB2 is off.

Disconnect all the wirings connected to the fan module as shown in the right figure.

1. Disconnect the wirings of the connector of CN201, CN202 and CN203 from the fan module.
2. Disconnect wirings of R, S, T, U, V, W on the fan module.
3. Measure the resistance between terminals using the tester. (Do not use a digital tester.) When measuring, check the color of tester probe and the terminals to be measured as shown in the table below..

Tester probe Red (+) Black(-)	Check for resistance value
P-R P-S P-T R-N S-N T-N P-U P-V P-W U-N V-N W-N	More than 1 kΩ
R-P S-P T-P N-R N-S N-T U-P V-P W-P N-U N-V N-W	The resistance value increases by degrees after the indicator moves for a moment. The resistance value increases by degrees between 1700KΩ~1900, KΩ). (Leave at least 30 seconds when measuring the next terminal).

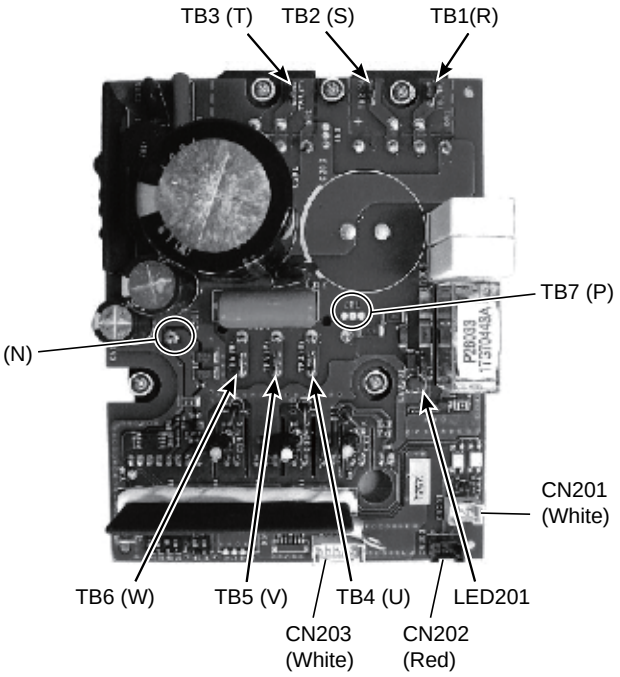

NOTE:

1. *Do not apply great force when removing the fan module, or the brazing will be fallen apart and a malfunction of the fan module may occur.*
2. *Identify the terminal Nos. with the mark band Nos. when reassembling. If incorrectly connected, malfunction or damage will occur.*
3. *Check to ensure that the electrical wires will not be caught between the mounting electrical components and the mounting plates when the PCB2 is remounted.*
4. *Apply silicon grease evenly on the whole rear side of the fan module when mounting. Silicon grease is available as a field-supplied accessory (Service parts No. P22760).*

Все каталоги и инструкции здесь: https://splitsystema48.ru/instrukcii-po-ekspluatacii-kondicionerov.html

■ Checking procedure for the electronic expansion valve

	Indoor unit electronic expansion valve	Outdoor unit electronic expansion valve
Locked with fully closed	Check the liquid pipe temperature during the heating process. It is abnormal if the temperature does not increase.	It is abnormal if the liquid pipe pressure does not increase during the cooling process.
Locked with slightly open	It is abnormal under the following conditions: The temperature of the freeze protection thermistor becomes lower than the suction air temperature when the unit which is under checking is stopped and the other units are under the cooling process.	It is abnormal if the liquid pipe pressure does not increase and the outlet temperature of the expansion valve decreases after the cooling process starts.
Locked with fully open	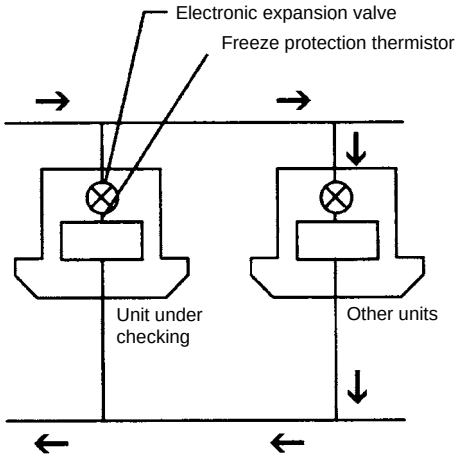	It is abnormal under the following conditions: after the heating process for more than 30 minutes, the discharge gas temperature of the compressor is not 10°C higher than the condensing temperature and there is no other faults, such as an excessive charge of refrigerant and others.

■ Checking of electrical coil parts

Name of parts	Model	Electrical wiring diagram	Wiring No.	Resistance (Ω) (±10%)
AC fan motor for outdoor unit	CCW8831 (C)(D)H 300W	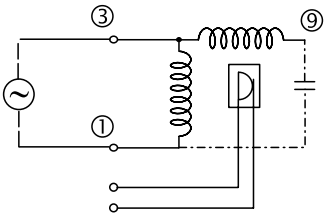	RED ③-⑨ WHT RED ③-① BLK	7.19 13.6 at 20 ºC
DC fan motor for outdoor unit	DMSBA8PHT 750W	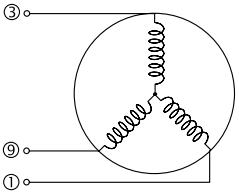	WHT ⑨-① BLK BLK ①-③ RED RED ③-⑨ WHT	2.53 2.53 2.53 at 20ºC

Все каталоги и инструкции здесь: https://splitsystema48.ru/instrukcii-po-ekspluatacii-kondicionerov.html

■ Other parts

Name of parts	Model	Resistance (Ω) (at 20 ºC)
Solenoid valve for gas bypass	Coil: SR10PA + Body: SR-10D	1,250
Reversing valve	Coil: STF-01AJ502D1 (50Hz) + Body: STF-0712G (8-12HP) Body: VHV-1511G (14-24HP) Body: VHV-1516G (26-48HP)	1,130
Compressor Motor (for Inverter Compressor)	E656DHD	0.51
Compressor Motor (for Constant Compressor)	E656DH	1.77
	E1000GH	1.10

Все каталоги и инструкции здесь: https://splitsystema48.ru/instrukcii-po-ekspluatacii-kondicionerov.html

■ Checking of compressor

Check list on compressor

Client:	Model:	Date:
Serial No.	Production date:	Checker:

No.	Check item	Check method	Result	Remarks
1	Are discharge gas thermistors THM8, THM9, THM12, THM13 and THM18 correctly connected?	1. Are the wires of each thermistor correctly connected in a visual inspection? 2. Make sure that 7-segment display of Td1 is higher than Td2 to Td5 when No.1 comp. is operating. Td1: Temp. of THM8 Td4: Temp. of THM13 Td2: Temp. of THM9 Td5: Temp. of THM18 Td3: Temp of THM12		
2	Are the thermistors THM8, THM9, THM12, THM13 and THM18 disconnected?	1 Make sure that themistor on the top of comp. is correctly mounted in a visual inspection. 2 Make sure that the actually measured temp. is greatly different from the display (Td1~Td5) during the check mode.		
3	Are the connectors for current sensor correctly connected?	1 Make sure that indications A1~A5 are 0 during the compressor. stoppage. 2 Make sure that indications A1~A5 are not 0 during the compressor operation. (However, A2~A5 are 0 during the stoppage of the comp.No. 2, 3, 4 and 5).		
4	Is current sensor faulty?			
5	Is current sensing part on PCB2 faulty?			
6	Is the direction of current sensor (CTU, CTV) reversed?	Check the direction → in a visual inspection		
7	Are the power supply wires U and V inserted correctly into the current sensor?	Make sure that the wires are correctly inserted.		
8	Are the ex.valves (MV1, MV2, MV3 and MVB) correctly connected?	Make sure that MV1 to CN10, MV2 to CN11, MV3 to CN20 and MVB to CN12 are correctly connected		
9	Are the ex.valves coils (MV1, MV2, MV3 and MVB) correctly mounted?	Make sure that each coil is correctly mounted on the valve.		
10	Are the refrigerant cycle and electrical wiring system incorrectly connected?	Make sure that the refrigerant is flowing into the indoor units by operating one refrigerating cycle only from the outdoor unit.		
11	Is the opening of ex. valve completely closed (locked)?	Check the following by means of the check mode of the outdoor unit. 1 Liquid pipe temp.(TL)< Inlet air temp.(Ti) during the cooling process 2 Liquid pipe temp.(TL)> Inlet air temp.(Ti) during the heating process		
12	Is the opening of ex. valve fully opened (locked)?	Make sure that the liquid pipe temp. is lower than the inlet air temp. of the stopped indoor unit when other indoor units are operating under the cooling process.		
13	Are the contacts for the comp. magnetic switch CMC faulty?	Check the surface of each contact (L1, L2 and L3) in a visual inspection.		
14	Is there any voltage malfunction among L1-L2, L2-L3 and L3-L1?	Make sure that the voltage imbalance is smaller than 3%. Note that the power source voltage must be within 380V or 415V±10%.		
15	Is the comp. oil acidified during the burning of the compressor motor?	Make sure that the oil color is not black		

Все каталоги и инструкции здесь: https://splitsystema48.ru/instrukcii-po-ekspluatacii-kondicionerov.html

Additional Information for "Check list on compresssor"

Check item	Additional information (mechanism of the compressor failure)
1 & 2	The discharge gas temperature (Td1) controls the liquid refrigerant return volume to the compressor when only the compressor No.1 is operating. If Td1 and Td2 are connected in the reverse order, the liquid refrigerant return volume will decrease even if the actual discharge gas temperature is high, because PCB1 is checking the wrong compressor temperature. Therefore, this abnormal overheating process will result in the insulation failure of the motor winding.
3, 4 & 5	The current sensor performs the overcurrent control (the operation frequency control) by detecting the current. In this case, the insulation failure of the motor winding will occur because the control is not available in spite of the actually high current.
6, 7	The current sensor checks the phase and adjusts the output electrical wave, in addition to the above-mentioned items. If a fault occurs, the output electrical wave becomes unstable. This generates stress to the motor winding and results in the insulation failure of the motor winding.
8, 9	During a cooling process, the fan speed of the outdoor unit controls the Pd and the MV of each indoor unit controls the Td and the SH. During a heating process, MVn control the Td and the SH. If the expansion valves are incorrectly connected, the correct control is not available. This results in the compressor seizure depending on the returning conditions of the liquid refrigerant. Also, this may result in the insulation failure of the motor winding depending on the overheating conditions.
10	If the refrigerant cycle and the electrical system are incorrectly connected, an abnormally low suction pressure operation is maintained or an abnormally high discharge pressure operation is maintained. This results in further stress to the compressor because the correct control of the compressor is not available.
11	Ditto.
12	The compressor may be locked due to the return operation of the liquid refrigerant during the cooling process.
13	If the contacting resistance becomes large, the voltage imbalance among each phase will cause an abnormal overcurrent.
14	In this case, the overcurrent will occur, the efficiency will decrease or the motor winding will be excessively heated.
15	In this case, it will result in the burning of the motor or the compressor seizure.

Все каталоги и инструкции здесь: https://splitsystema48.ru/instrukcii-po-ekspluatacii-kondicionerov.html

Все каталоги и инструкции здесь: https://splitsystema48.ru/instrukcii-po-ekspluatacii-kondicionerov.html

8. Spare parts

Contents

8. Spare parts ____ 189
8.1. RAS-8~12FSN2 - Cabinet and fan ____ 190
8.2. RAS-8~12FSN2 - Refrigerant cycle ____ 191
8.3. RAS-8~12FSN2 - Eelectrical equipment ____ 192
8.4. RAS-14~24FSN2 - Cabinet and fan ____ 193
8.5. RAS-14~24FSN2 - Refrigerant cycle ____ 194
8.6. RAS-14~48FSN2 - Electrical equipment ____ 195
8.7. RAS-14~48FSN2 - Electrical equipment ____ 196

Все каталоги и инструкции здесь: https://splitsystema48.ru/instrukcii-po-ekspluatacii-kondicionerov.html

8.1. RAS-8~12FSN2 - Cabinet and fan

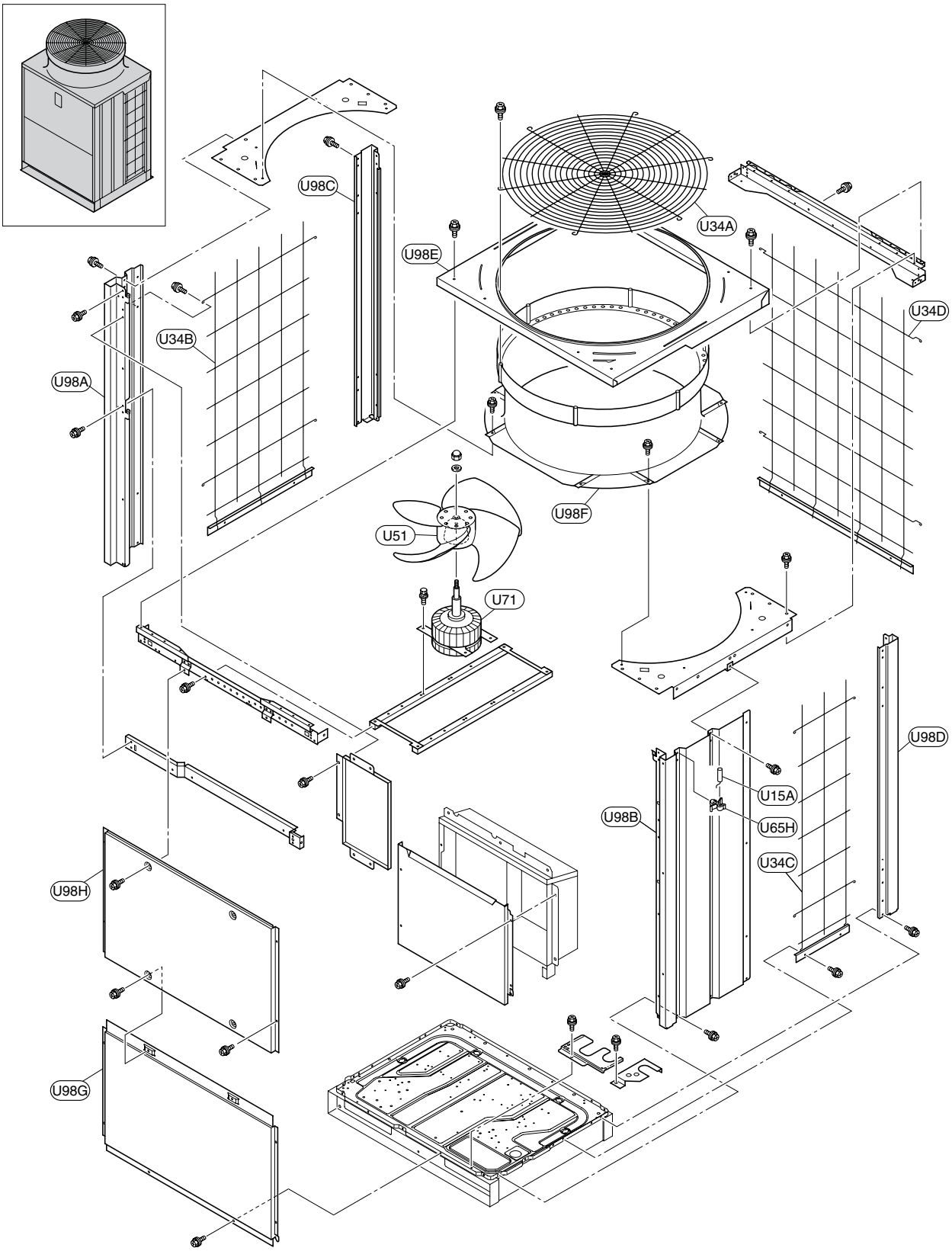

Все каталоги и инструкции здесь: https://splitsystema48.ru/instrukcii-po-ekspluatacii-kondicionerov.html

8.2. RAS-8~12FSN2 - Refrigerant cycle

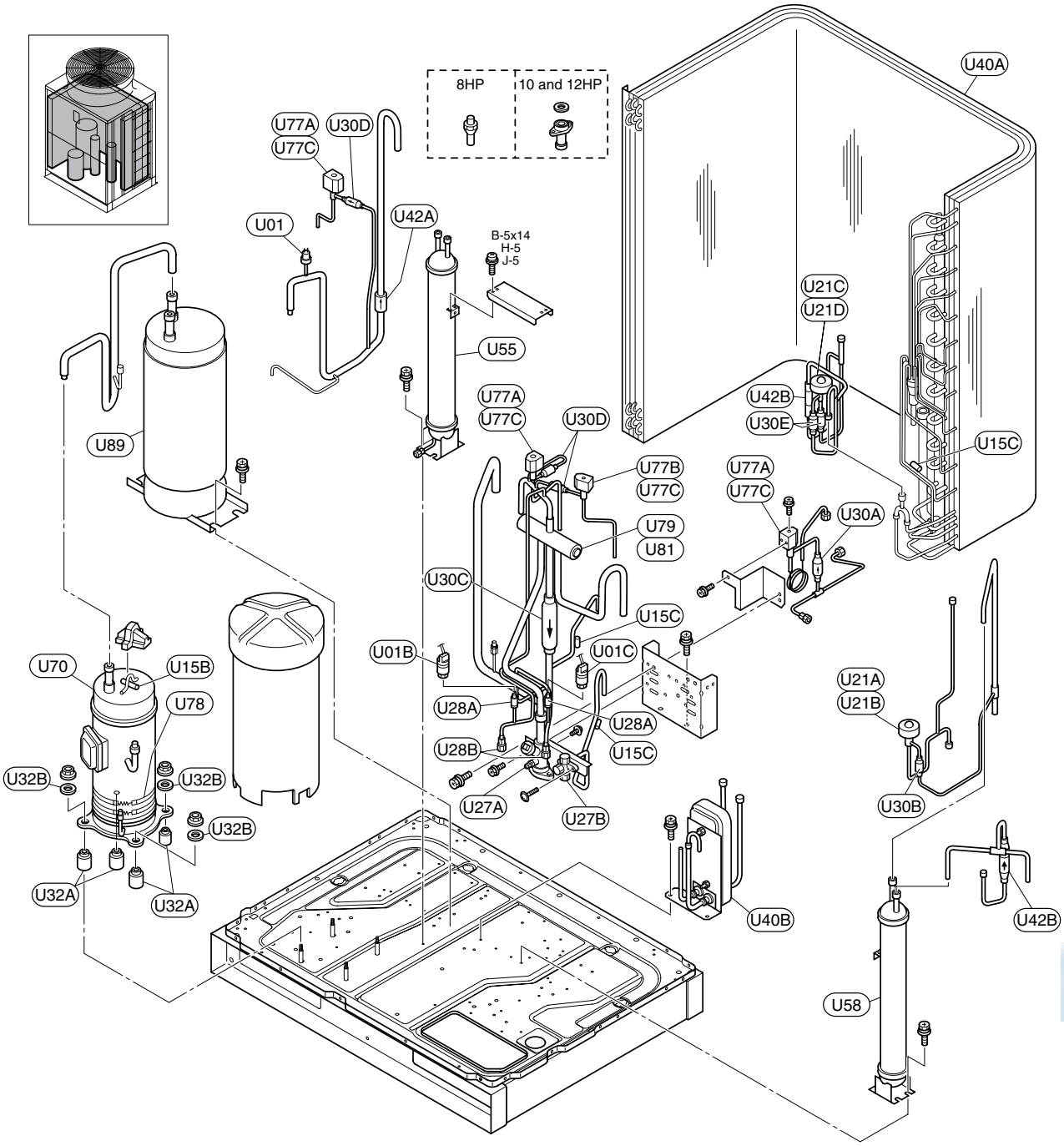

8

Все каталоги и инструкции здесь: https://splitsystema48.ru/instrukcii-po-ekspluatacii-kondicionerov.html

8.3. RAS-8~12FSN2 - Eelectrical equipment

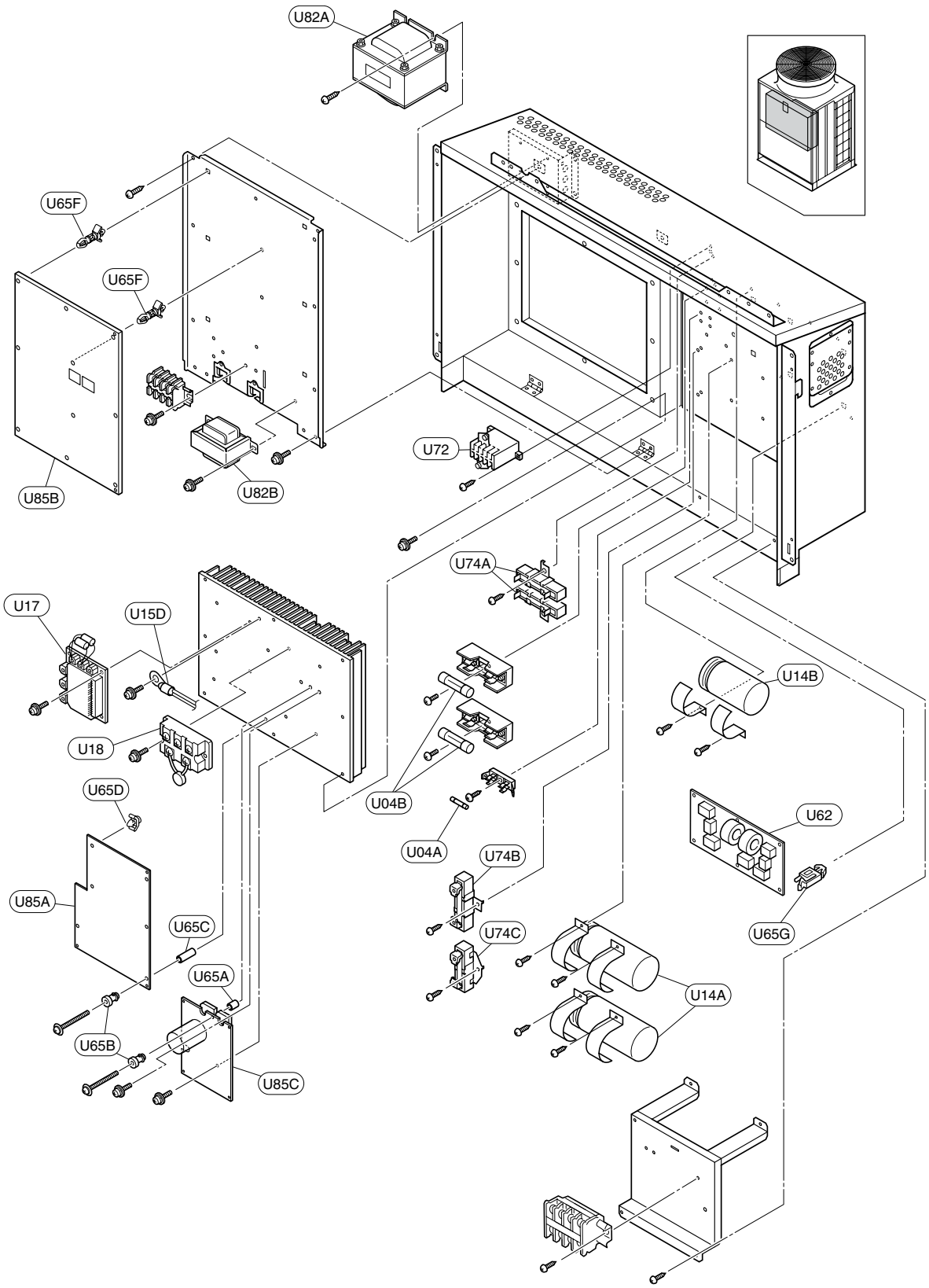

Все каталоги и инструкции здесь: https://splitsystema48.ru/instrukcii-po-ekspluatacii-kondicionerov.html

8.4. RAS-14~24FSN2 - Cabinet and fan

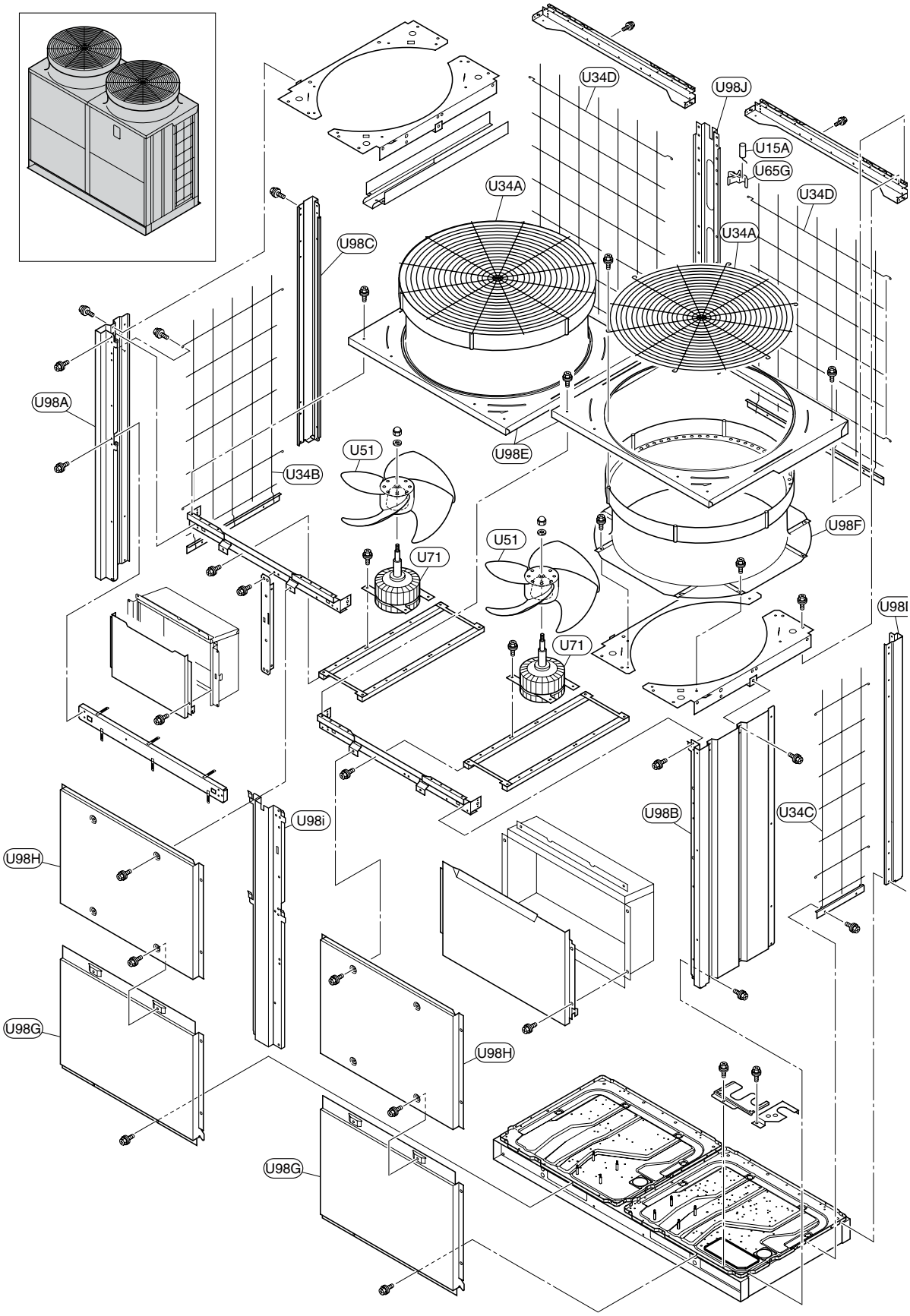

Все каталоги и инструкции здесь: https://splitsystema48.ru/instrukcii-po-ekspluatacii-kondicionerov.html

8.5. RAS-14~24FSN2 - Refrigerant cycle

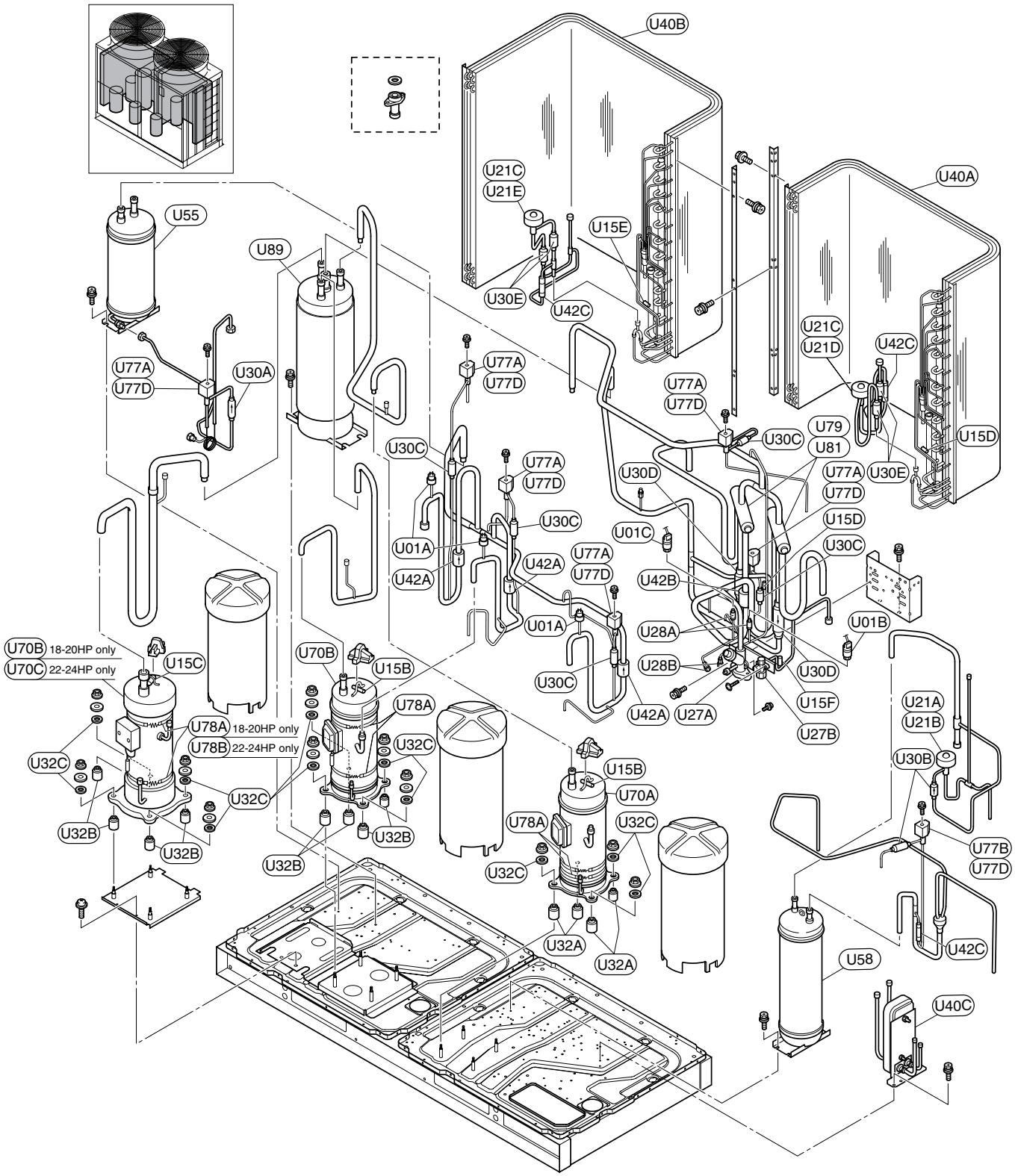

Все каталоги и инструкции здесь: https://splitsystema48.ru/instrukcii-po-ekspluatacii-kondicionerov.html

8.6. RAS-14~48FSN2 - Electrical equipment

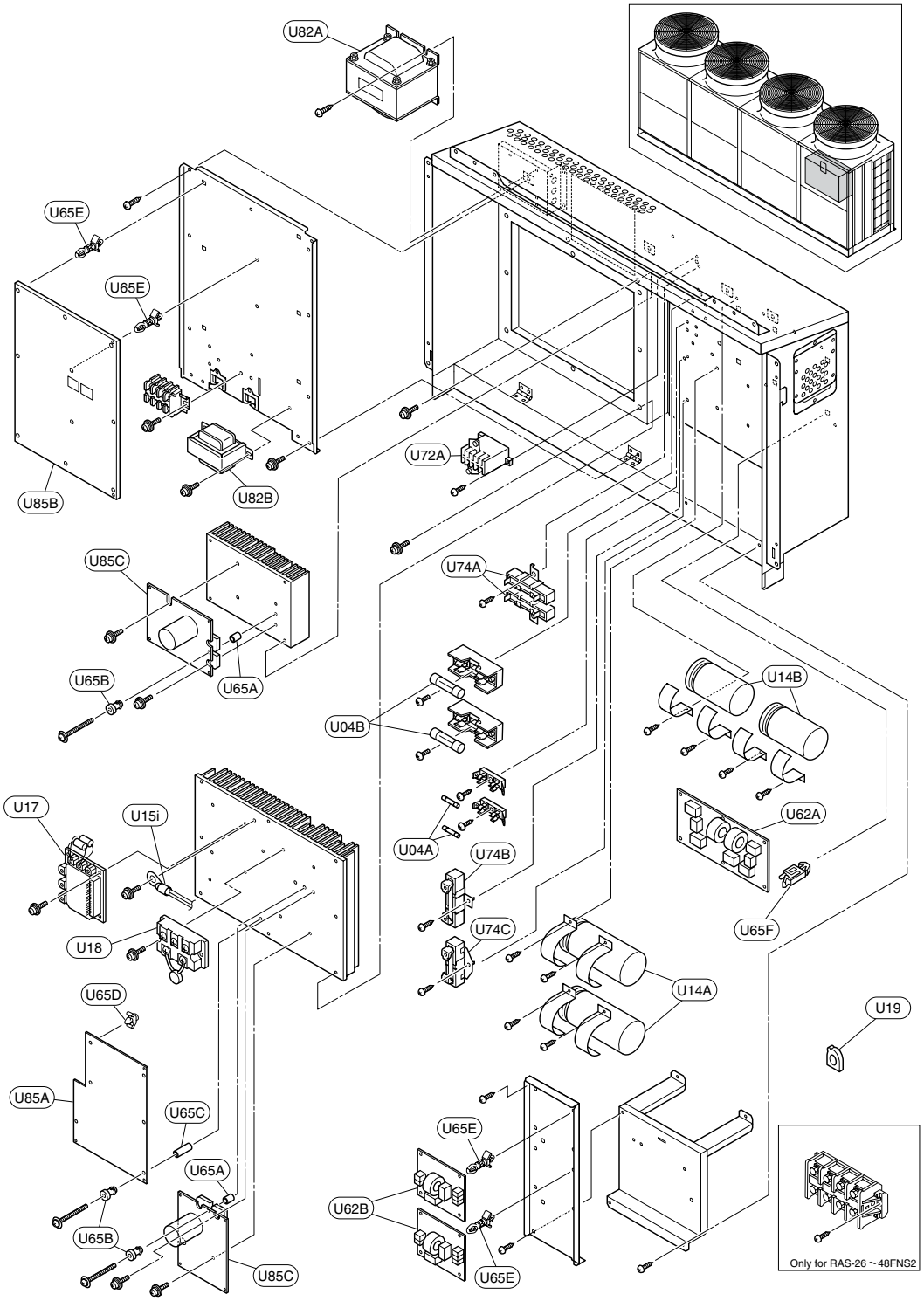

8

Все каталоги и инструкции здесь: https://splitsystema48.ru/instrukcii-po-ekspluatacii-kondicionerov.html

8.7. RAS-14~48FSN2 - Electrical equipment

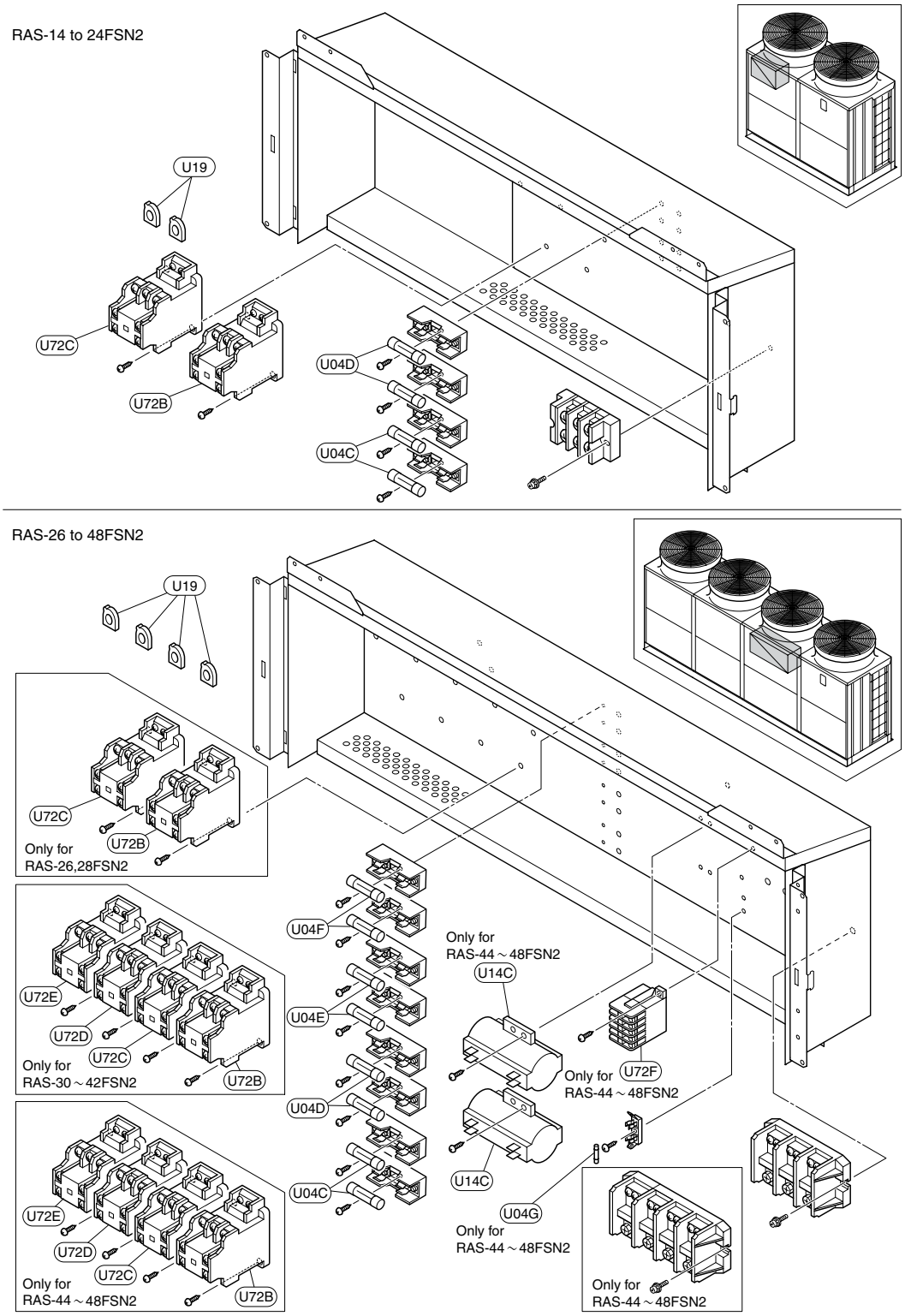

Все каталоги и инструкции здесь: https://splitsystema48.ru/instrukcii-po-ekspluatacii-kondicionerov.html

Number	Applicable models RAS	Remarks	Part name
U01A	08HP~44HP	HIGH PRESSURE	PRESSURE SW
U01B	08HP~44HP	PD	PRESSURE SENSOR
U01C	08HP~44HP	PS	
U04A	08HP~12HP	FOR DC FAN 12A	FUSE
	14HP~44HP	FOR DC FAN (MOF1, 2) 12A	
U04B	08HP~12HP	FOR INV. COMP. 40A	
	14HP~44HP	FOR INV. COMP. (MC1) 40A	
U04C	14HP~22HP	FOR CONSTANT SPEED COMP. (MC2), 32A	
	26HP~44HP	FOR CONSTANT SPEED COMP. (MC2), 40A	
U04D	18HP	FOR CONSTANT SPEED COMP. (MC3), 32A	
	22HP~44HP	FOR CONSTANT SPEED COMP. (MC3), 40A	
U04E	30HP~38HP	FOR CONSTANT SPEED COMP. (MC4), 32A	
	44HP	FOR CONSTANT SPEED COMP. (MC4), 40A	
U04F	38HP~44HP	FOR CONSTANT SPEED COMP. (MC5), 40A	
U04G	44HP	FOR AC FAN (MOF4) 12A	
U14A	08HP~44HP	FOR INV. COMP. 4700mF (CB1, CB2)	CAPACITOR
U14B	08HP~12HP	FOR DC FAN 1800mF (CB3)	
	14HP~26HP	FOR DC FAN 1800mF (CB3, CB4)	
	30HP~44HP	FOR DC FAN (MOF1, 2) 1800mF (CB3, CB4)	
U14C	26HP~38HP	FOR AC FAN (MOF2) 16mF	
	44HP	FOR AC FAN (MOF2, 4) 16mF	
U15A	08HP~44HP	TA	THERMISTOR
U15B	08HP~12HP	TD1	
	14HP~44HP	TD1, 2	
U15C	30HP~38HP	TD3	
	44HP	TD3, 4	
U15D	08HP~12HP	FOR INV. FIN	
	14HP~38HP	TE1, TSC	
U15E	30HP~38HP	TE2	
	44HP	TE1, TSC	
U15F	14HP~22HP	TCHG	
	26HP~38HP	TE3	
	44HP	TE2	
U15G	26HP~38HP	TCHG	
	44HP	TE3, 4	
U15H	44HP	TCHG	
U15i	14HP~44HP	FOR INV. FIN	
U17	08HP~44HP	IPM	TRANSISTOR MODULE
U18	08HP~44HP	DM	DIODE MODULE
U19	14HP~44HP	FOR CONSTANT COMP. CT	SENSOR (CURRENT TRANSFORMER)
U21A	08HP~44HP	MVB	EXP. VALVE
U21B	08HP~44HP	MVB	COIL FOR EXP. VALVE
U21C	08HP~12HP	MV1	EXP. VALVE
	14HP~22HP	MV1, MV2	
	26HP~38HP	MV1, MV2, MV3	
	44HP	MV1, MV2, MV3, MV4	
U21D	08HP~44HP	MV1	COIL FOR EXP. VALVE
U21E	14HP~44HP	MV2	
U21F	26HP~38HP	MV3	
	44HP	MV3, MV4	
U27A	08HP	3/4, GAS	STOP VALVE
	10HP~12HP	1/1, GAS	
	14HP~22HP	32, GAS	
	26HP~44HP	3/8, GAS	
U27B	08HP	3/8, LIQUID	
	10HP~14HP	1/2, LIQUID	
	18HP~22HP	5/8, LIQUID	
	26HP~44HP	3/4, LIQUID	
U28A	08HP~44HP		PGC JOINT
U28B	08HP~44HP		CHECK JOINT

Все каталоги и инструкции здесь: https://splitsystema48.ru/instrukcii-po-ekspluatacii-kondicionerov.html

Number	Applicable models RAS	Remarks	Part name
U30A	08HP~44HP		
U30C	08HP~44HP		
U30D	08HP~44HP		
U30E	08HP~44HP		
U30F	26HP~44HP		
U32A	08HP~12HP		VIBRATION ABSORBER
	14HP~44HP	FOR INV. COMP.	
U32B	08HP~12HP		
	14HP~44HP	FOR CONSTANT COMP.	
U32C	14HP~44HP		
U34A	08HP~44HP	OUTLET	AIR GRILLE
U34B	08HP~44HP	INLET (LEFT SIDE)	
U34C	08HP~44HP	INLET (RIGHT SIDE)	
U34D	08HP~44HP	INLET (BEHIND)	
U34E	26HP	INLET (BEHIND)	
	30HP	INLET (BEHIND)	
	38HP	INLET (BEHIND)	
	44HP	INLET (BEHIND)	
U40A	08HP~44HP		CONDENSER ASSEMBLY
U40B	08HP		PLATE HEAT EXCHANGER
	10HP~12HP		
	14HP~44HP		CONDENSER ASSEMBLY
U40C	14HP~22HP		PLATE HEAT EXCHANGER
	26HP~44HP		CONDENSER ASSEMBLY
U40D	26HP~44HP		PLATE HEAT EXCHANGER
U42A	08HP~44HP		CHECK VALVE
U42B	08HP~44HP		
U42C	14HP~44HP		
U51	08HP~44HP	f710	PROPELLER FAN
U55	08HP~44HP		OIL SEPARATOR ASS'Y
U58	08HP~44HP		RECEIVER ASS'Y
U62	08HP~44HP	NF1	NOISE SUPPRESSOR
U62B	14HP~44HP	NF2	
U62C	14HP~44HP	NF3	
U65A	08HP~44HP		PLASTIC MATERIAL
U65B	08HP~44HP		
U65C	08HP~44HP		
U65D	08HP~44HP		
U65E	14HP~44HP		
U65F	08HP~44HP		
U65G	08HP~12HP		
	14HP~44HP	FOR THERMISTOR (TA)	
U65H	08HP~12HP	FOR THERMISTOR (TA)	
U70	08HP~12HP	E656DHD-65D2Y	COMPRESSOR
U70A	14HP~44HP	E656DHD-65D2Y INVERTER	
U70B	14HP~22HP	E656DH-65D2Y	
	26HP~44HP	E1000GH-100D2Y	
U70C	30HP	E656DH-65D2Y	
	38HP	E656DH-65D2Y	
U71	08HP~22HP	0.81KW (DC)	MOTOR
U71A	26HP~44HP	0.81KW (DC)	
U71B	26HP~44HP	0.3KW (AC)	
U72	08HP~12HP	FOR INV. COMP.	MAG. CONTACTOR
U72A	14HP~44HP	FOR INV. COMP. (MC1)	
U72B	14HP~44HP	FOR CONSTANT SPEED COMP. (MC2)	
U72C	18HP~44HP	FOR CONSTANT SPEED COMP. (MC3)	
U72D	30HP~44HP	FOR CONSTANT SPEED COMP. (MC4)	
U72E	38HP~44HP	FOR CONSTANT SPEED COMP. (MC5)	
U72F	44HP	FOR FAN	
U74A	08HP~44HP	RS	RESISTOR
U74B	08HP~44HP	R1	
U74C	08HP~44HP	R2	

Все каталоги и инструкции здесь: https://splitsystema48.ru/instrukcii-po-ekspluatacii-kondicionerov.html

Number	Applicable models RAS	Remarks	Part name
U77A	08HP~12HP	SVF, SVA, SVB	SOLENOID VALVE
	14HP~26HP	SVF, SVA1, 2, SVB, SVG	
	30HP~44HP	SVF, SVA1, 2, 3, 4 SVB, SVG	
U77B	08HP~44HP	SVC	
U77C	08HP~12HP	SVF, SVA, SVB, SVC	COIL FOR SOLENOID VALVE
	14HP	SVF, SVA1, 2, SVB, SVG, SVC	
	18HP~26HP	SVF, SVA1, 2, 3, SVB, SVG, SVC	
	30HP	SVF, SVA1, 2, 3, 4 SVB, SVG, SVC	
	38HP	SVF, SVA1, 2, 3, 4, 5 SVB, SVG, SVC	
	44HP	SVF, SVA1, 2, 3, 4 SVB, SVG, SVC	
U77D	44HP	SVA5	
U78	08HP~44HP	40W	OIL HEATER
U78B	22HP~44HP	40.8W (FOR E1000GH)	
U79	08HP~44HP		REVERSING VALVE ASS'Y
U81	08HP~44HP		COIL FOR REVERSING VALVE
U82A	08HP~44HP	DCL	REACTOR
U82B	08HP~44HP		TRANSFORMER
U85A	08HP~44HP	PCB2 (INV.) (PV041)	PRINTED CIRCUIT BOARD
U85B	08HP~44HP	PCB1 (PO071)	
U85C	08HP~44HP	FANM1	FAN CONTROLLER
U89	08HP~44HP		ACCUMULATOR
U98A	08HP~44HP	SIDE COVER (LEFT)	CABINET PANEL
U98B	08HP~44HP	SIDE COVER (RIGHT)	
U98C	08HP~44HP	SIDE COVER (LEFT)	
U98D	08HP~44HP	SIDE COVER (RIGHT)	
U98E	08HP~44HP	UPPER COVER	
U98F	08HP~22HP	BELL-MOUTH	
	26HP~44HP	UPPER COVER	
U98G	08HP~22HP	SERVICE COVER (LOWER)	
	26HP~44HP	BELL-MOUTH	
U98H	08HP~22HP	SERVICE COVER (UPPER)	
	26HP~44HP	SERVICE COVER (LOWER)	
U98i	14HP~22HP	VERTICAL STAY (FRONT)	
	26HP~44HP	SERVICE COVER (LOWER)	
U98J	14HP~22HP	VERTICAL STAY (BEHIND)	
	26HP~44HP	SERVICE COVER (UPPER)	
U98K	26HP~44HP	SERVICE COVER (UPPER)	
U98L	26HP~44HP	VERTICAL STAY (FRONT)	
U98M	26HP~38HP	VERTICAL STAY (BEHIND)	

Все каталоги и инструкции здесь: https://splitsystema48.ru/instrukcii-po-ekspluatacii-kondicionerov.html

Все каталоги и инструкции здесь: https://splitsystema48.ru/instrukcii-po-ekspluatacii-kondicionerov.html

9. Servicing

Contents

9. Servicing 201

9.1.1Outdoor units FSN2 202

9.1.1. Removing air intake grille 202
9.1.2. Removing front service panel 203
9.1.3. Removing fan guard net 204
9.1.4. Removing outdoor fan 205
9.1.5. Removing compressor 207
9.1.6. Replacing return oil circuit (Strainer) 217
9.1.7. Removing high pressure switch, high pressure sensor and low pressure sensor 219
9.1.8. Removing reversing valve and removing reversing valve coil 222
9.1.9. Removing solenoid valve and solenoid valve coil 225
9.1.10. Replacing oil separator, liquid tank and accumulator 229
9.1.11. Removing stop valve 233
9.1.12. Removing expansion valve coil 235
9.1.13. Removing thermistor forliquid pipe 237
9.1.14. Removing thermistor for ambient temperature 239
9.1.15. Removing electrical control box 240
9.1.16. Removing other electrical components 242

Все каталоги и инструкции здесь: https://splitsystema48.ru/instrukcii-po-ekspluatacii-kondicionerov.html

9.1.1Outdoor units FSN2

9.1.1. Removing air intake grille

■ At Rear Side

1 Remove screws at the bottom of the air intake grille. (six (6) screws per grille)

2 Remove the air intake grille by pulling upward and unhook.

■ At Right and Left Side

1 Remove six (6) screws fixing each side of the air intake grille.

2 Remove the air intake grille by pulling up and unhook

■ **RAS-8FSN2 to RAS-12FSN2**

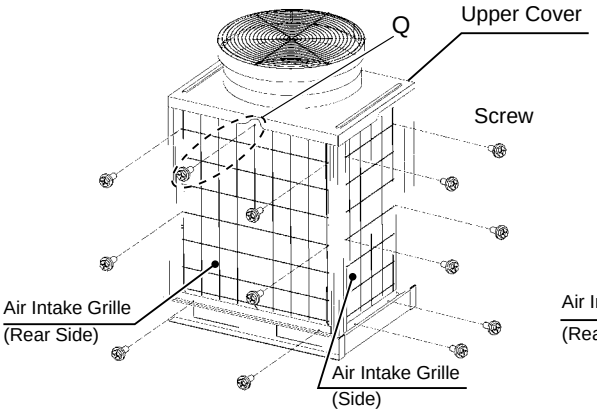

■ **RAS-14FSN2 to RAS-24FSN2**

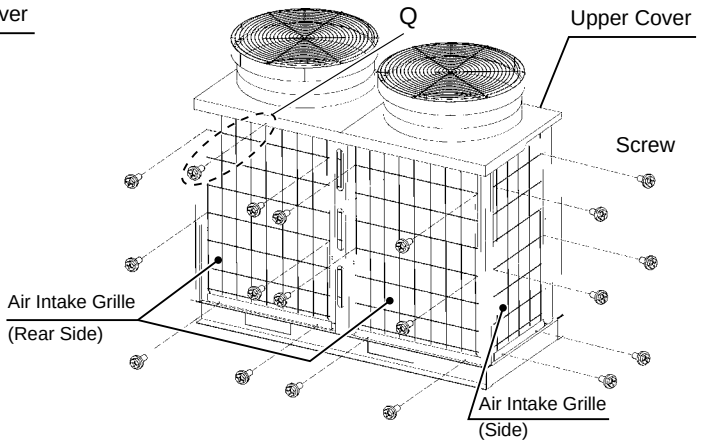

■ **RAS-26FSN2 to RAS-42FSN2**

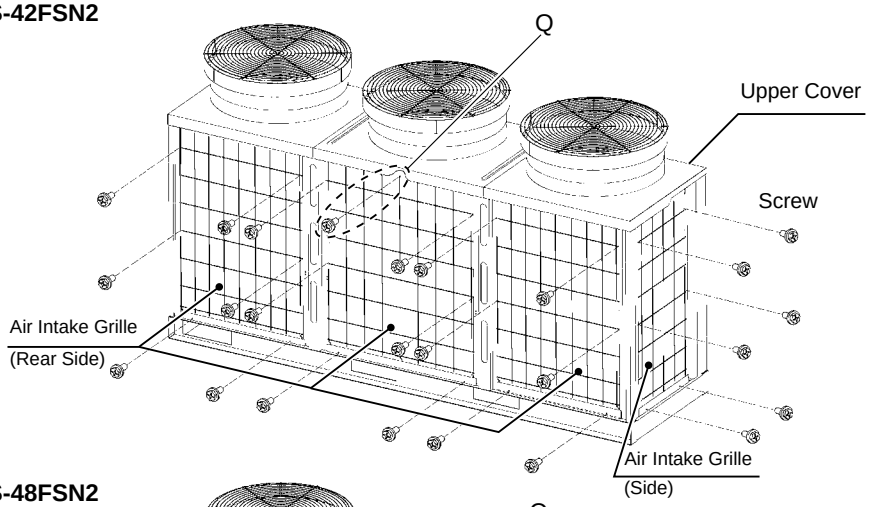

■ **RAS-42FSN2 to RAS-48FSN2**

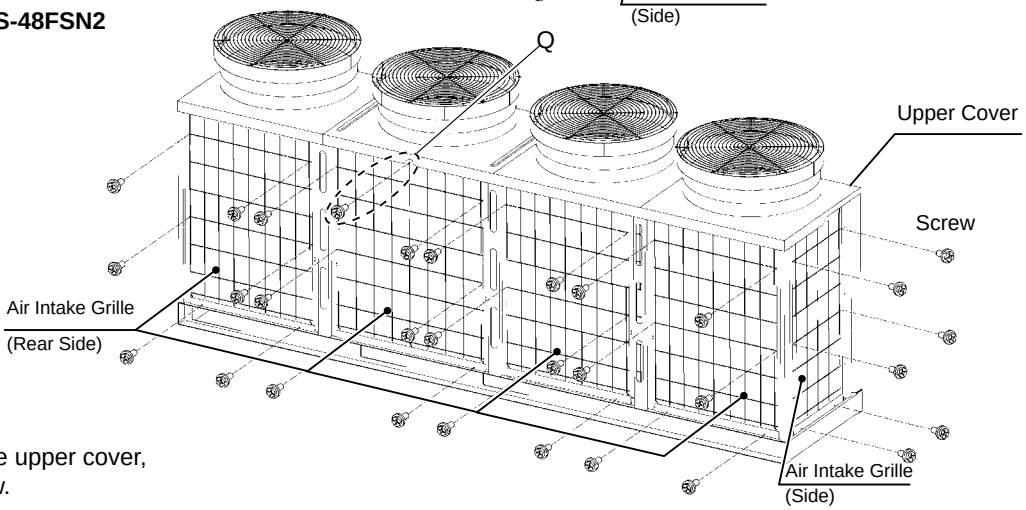

Q: After removing the upper cover, remove this screw.

Все каталоги и инструкции здесь: https://splitsystema48.ru/instrukcii-po-ekspluatacii-kondicionerov.html

9.1.2. Removing front service panel

Remove screws fixing the front service panel.
Service Panel: eight (8) screws, Front Panel: six (6) screws

Slightly lift the panels upward and remove them.

NOTE:
When attaching / removing the service panel, pay attention not to be injured with the plate edge.

■ RAS-8FSN2 to RAS-12FSN2

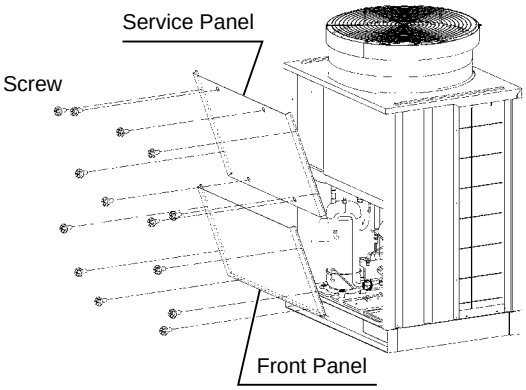

■ RAS-14FSN2 to RAS-24FSN2

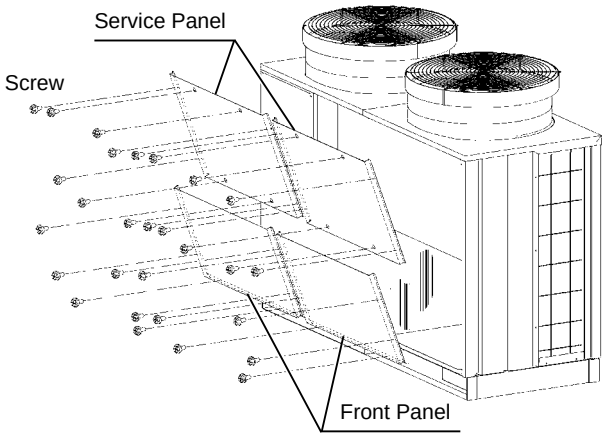

■ RAS-26FSN2 to RAS-48FSN2
(figure for RAS-26FSN2 to RAS-42FSN2)

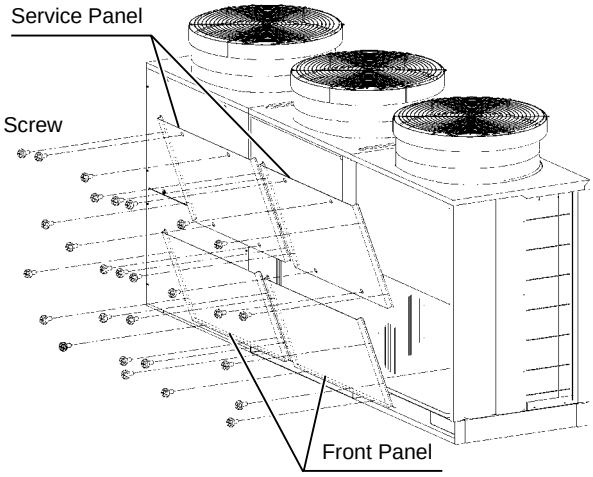

NOTES:

1. *When removing the front service panel, remove the screws at the lower part of the panel first.*
2. *When attaching the front service panel, insert the hook in the bottom end of the square hole at the side panel as shown in the figure.*

   DO NOT insert the service panel lower end to the bottom base inside.

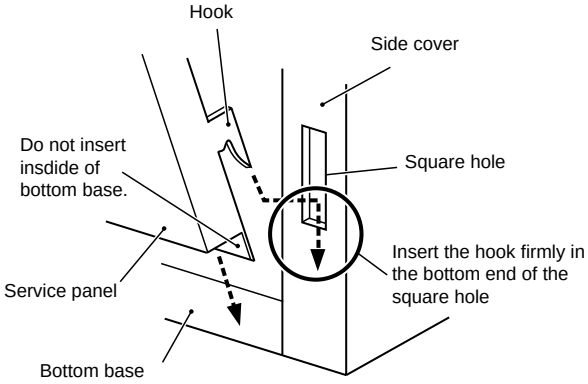

Все каталоги и инструкции здесь: https://splitsystema48.ru/instrukcii-po-ekspluatacii-kondicionerov.html

9.1.3. Removing fan guard net

Remove six (6) screws fixing the fan guard net.

Remove the fan guard net.

NOTE:
DO NOT apply the excessive force to the shroud (plastic part) to avoid deformation and breakage.

■ **RAS-12FSN2 (Example)**

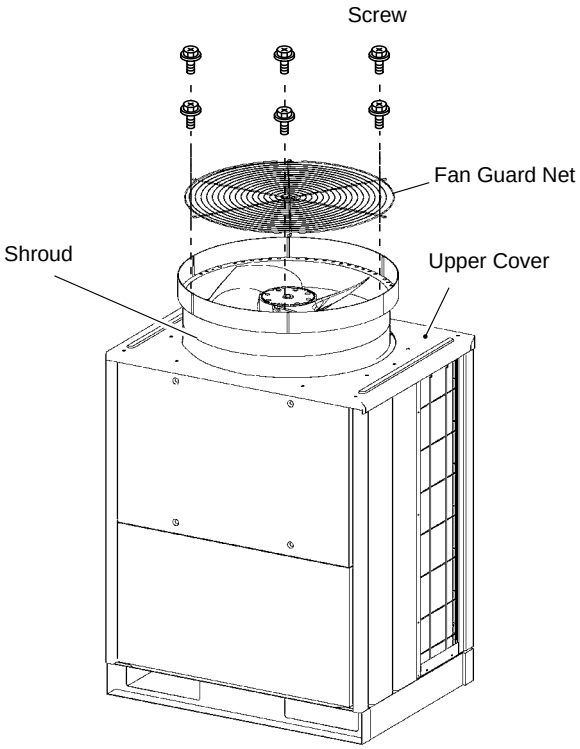

Все каталоги и инструкции здесь: https://splitsystema48.ru/instrukcii-po-ekspluatacii-kondicionerov.html

9.1.4. Removing outdoor fan

1 Remove the fan guard net according to the item "Removing Fan Guard Net".

■ **RAS-8FSN2 to RAS-12FSN2**

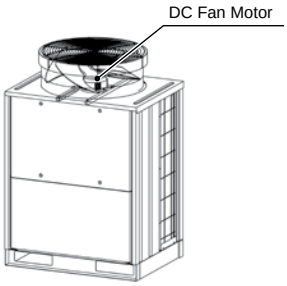

■ **RAS-14FSN2 to RAS-24FSN2**

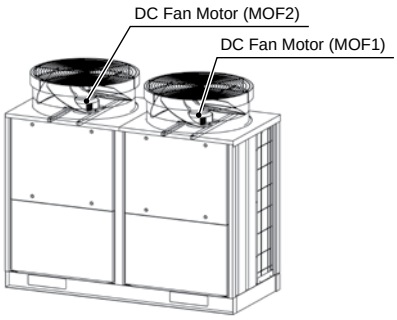

■ **RAS-26FSN2 to RAS-42FSN2**

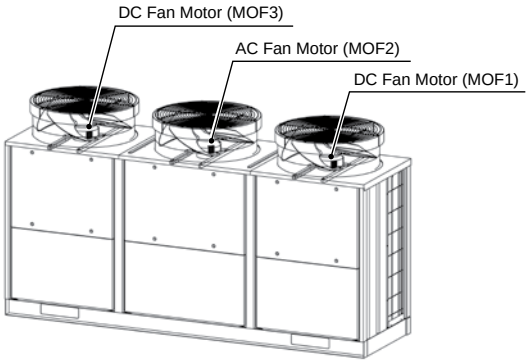

■ **RAS-44FSN2 to RAS-48FSN2**

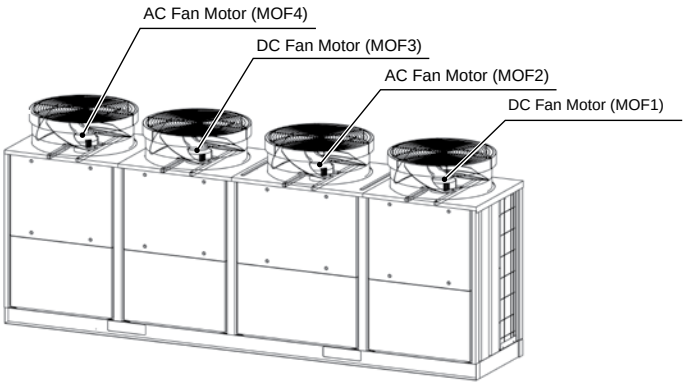

Fan motor position

2 Remove the nut and the flat washer fixing the propeller fan onto the motor shaft by use of an adjustable wrench. Remove the propeller fan from the motor shaft. If it is difficult to remove the fan because the fan is firmly fixed with the motor shaft, use a puller.

NOTE:
DO NOT apply excessive force to the shroud (plastic part) to avoid deformation and breakage.

■ **RAS-12FSN2 (Example)**

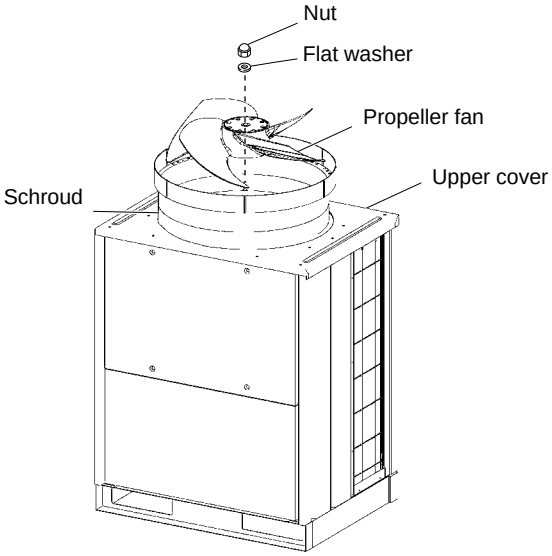

Все каталоги и инструкции здесь: https://splitsystema48.ru/instrukcii-po-ekspluatacii-kondicionerov.html

3 Removing Wire
   – Remove the service panel and the electrical control box cover according to the item 2.2 “Removing Front Service Panel” and the item 2.15 “Removing Electrical Control Box”.
   – Disconnect the connector for the motor in the electrical control box.
4 Remove four (4) screws fixing the motor, and remove the motor.

   (AC Fan Motor (M8), DC Fan Motor (M5))
5 When reassembling the outdoor fan, perform in the reverse procedure for removing.

NOTES:

1. *The cord outlet end of the motor should be downward-facing when mounting the motor. (Make the wire trap.)*
2. *Fix the motor wire onto the motor clamp with the plastic tie to avoid contact with the propeller fan.*
3. *When mounting the propeller fan, put and push the propeller fan with matching the mark (⊖ with the cut out part of the motor shaft). Firmly fix the propeller fan with 30N.m torque after the head of the fan shaft comes up.*

Torque for Mounting Propeller Fan
30N·m

4. *Connect the motor wire connector with the wire connector in the electrical control box.*

6 Check that the gap between the propeller fan and the upper cover is even by observing from the upper cover top. Also check that there is no noise caused by contacting propeller fan with the upper cover during the propeller fan operation.

■ **RAS-12FSN2 (Example)**

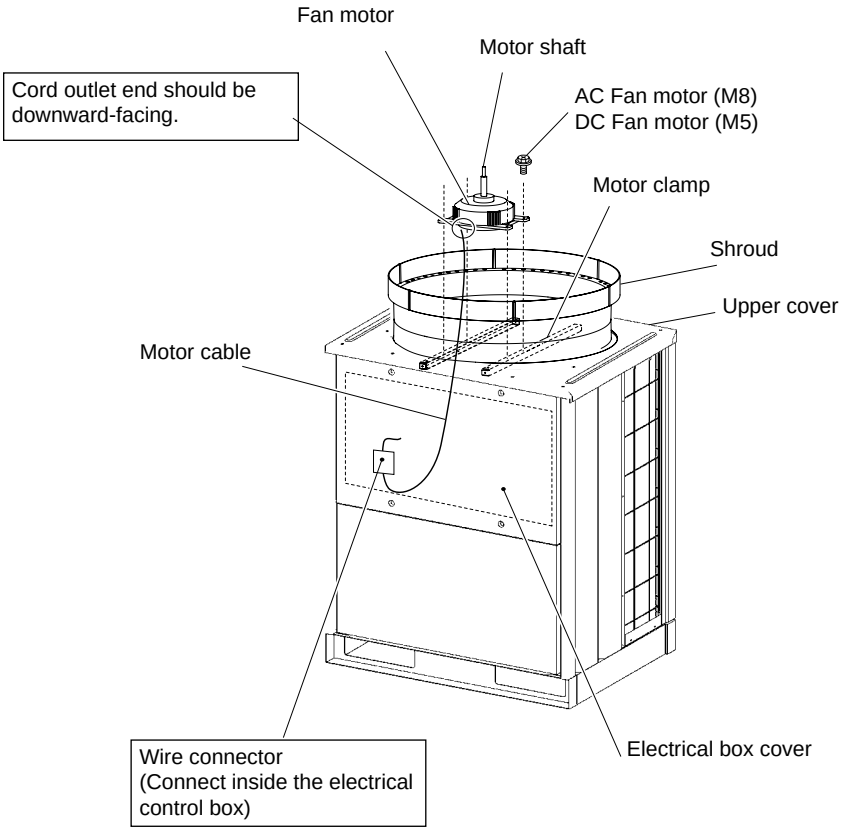

Все каталоги и инструкции здесь: https://splitsystema48.ru/instrukcii-po-ekspluatacii-kondicionerov.html

9.1.5. Removing compressor

When collect the refrigerant by operating the compressor, refer to “Method of Collecting Refrigerant”.
In other cases, collect the refrigerant before starting the work, and turn OFF the power source of the unit.

NOTE:
Do NOT touch the compressor and the high pressure refrigerant piping in operation or immediately stopping the unit because of the high temperature. When removing the wiring or reassembling the compressor, pay attention not to touch the wiring with the compressor or the refrigerant piping.

1 Remove the front service panel according to the item “Removing Front Service Panel”.
In case that the outdoor unit is installed closely to the wall, remove the refrigerant piping and move the outdoor unit away from the wall.

2 Release the tack for top cap of the compressor and remove the top cap.

2 Remove the Td thermistor on the top of the compressor.

NOTE:
The thermistor holder, thermistor fixing plate and the waterproof cover are used again when reassembling. Keep them in a box so that the parts are stored correctly.

NOTE:
When removing the compressor, the electrical control box located above the compressor may disturb removing waterproof cover. In that case, the electrical control box should be removed before starting work. If not, the inner aluminium sheet may be damaged when removing waterproof cover.

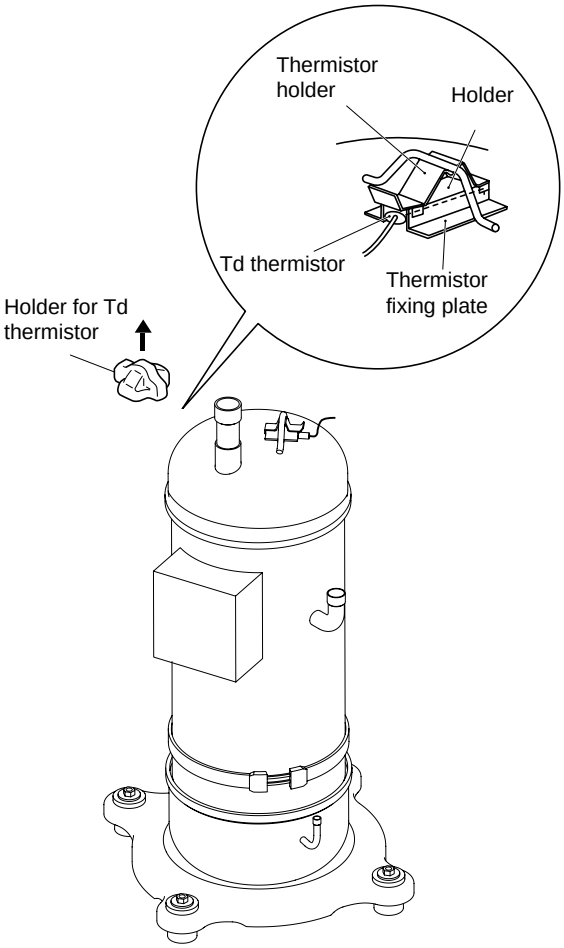

Все каталоги и инструкции здесь: https://splitsystema48.ru/instrukcii-po-ekspluatacii-kondicionerov.html

4 Release the bind lace of the waterproof cover for removing.

NOTES:

1. *When removing the waterproof cover, pay attention not to deform the piping around the cover. The brazing part may be damaged due to pipe deformation.*
2. *When removing the compressor, pay attention not to be injured with the sheet metal edge or the heat exchanger fins.*
3. *The aluminium sheet is conductive. If the aluminium sheet is damaged, it may lead to the failure due to electrical wiring contact. To avoid such a failure, check the waterproof cover conditions when fixing.*

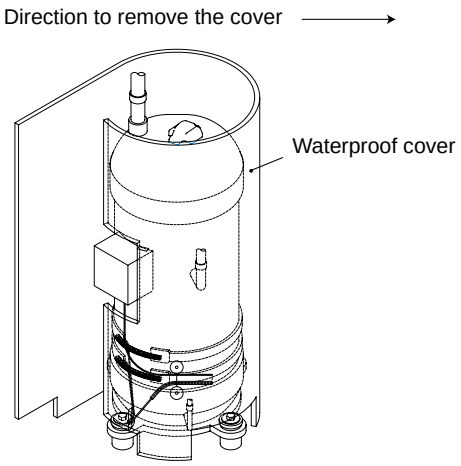

Inverter Compressor (E656DHD)

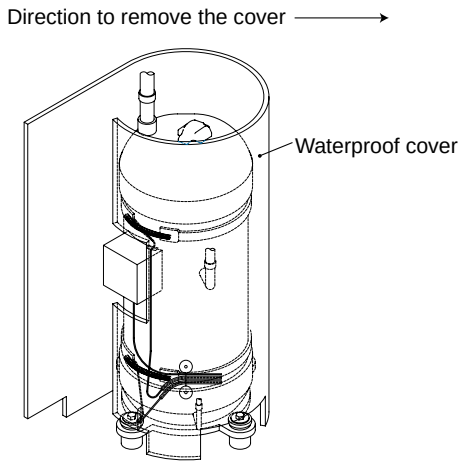

Constant Speed Compressor (E656DH, E1000GH)

5 Remove the terminal cover for the compressor and disconnect the wiring to the compressor terminals. Match the terminal Nos. with the mark band Nos. when reassembling. If the wiring is connected incorrectly, the compressor may be damaged due to reverse rotation.

NOTES:

- *When replacing the compressor, check for the ring terminal condition. If the ring terminal is damaged or something wrong with it, replace it with new one.*
- *Fix the lead wire firmly with plastic ties.*
- *Retighten the compressor screws after replacing.*

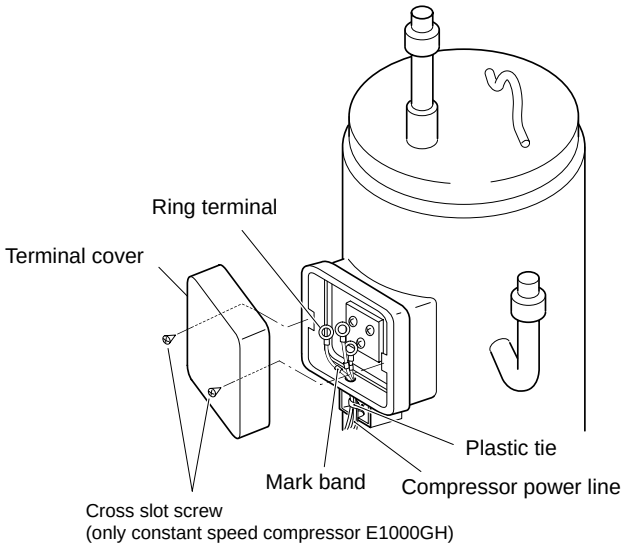

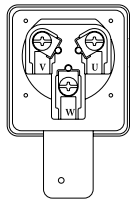

Inverter compressor (E656DHD)
Constant speed compressor (E656DH)

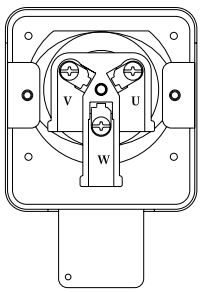

Constant speed compressor (E1000GH)

Все каталоги и инструкции здесь: https://splitsystema48.ru/instrukcii-po-ekspluatacii-kondicionerov.html

6 Release the spring to remove the oil heater.

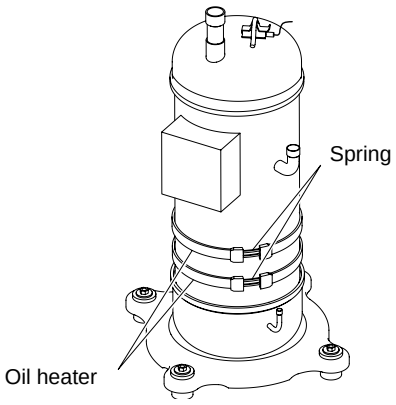

Inverter Compressor (E656DHD)

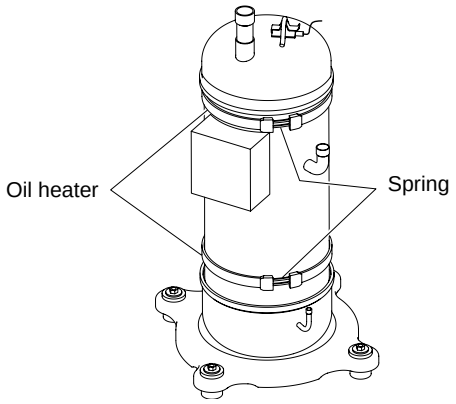

Constant Speed Compressor (E656DH, E1000GH)

7 Disconnect the discharge and the suction pipes from the compressor.

Check that the pipe inside pressure is equal to the atmospheric pressure. Cut the pipe at the closer position to the compressor from the brazing part. After cutting, remove the pipe from the brazing part of the compressor.

NOTES:

1. *All the pipes are connected by brazing. When applying the burner to the pipe connections, the oil adhered inside the pipe may burn. When brazing, clear the flammable materials around the compressor.*
2. *Burner work under applying gas pressure is very dangerous. Make sure to cut the pipes first before burner work.*

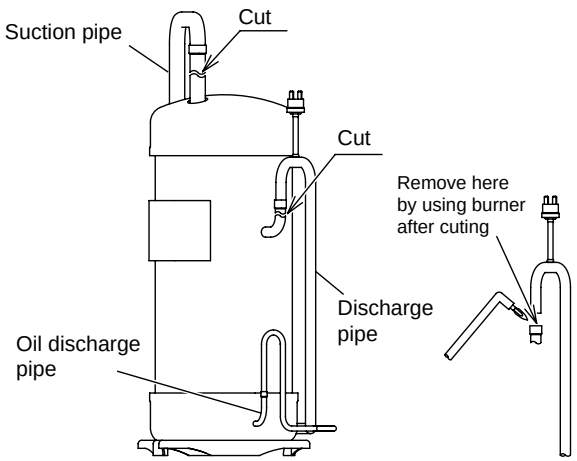

Все каталоги и инструкции здесь: https://splitsystema48.ru/instrukcii-po-ekspluatacii-kondicionerov.html

8 Disconnect the oil discharge pipe from the compressor. When disconnecting, pinch and cut the pipe at the closer position to the compressor from the brazing part, so that the refrigerant oil remained inside the compressor does not overspill from oil discharge pipe. Before disconnecting the oil discharge pipe at the piping side, check that the oil at the brazing part is completely removed.

NOTES:

1. *If the oil discharge pipe is disconnected without performing the above procedure (for example, applying burner directly to the brazing part), the refrigerant oil spilt from the oil discharge pipe is caught fire. Make sure to follow the procedure for safety.*
2. *DO NOT throw out the oil that is collected by the oil pan and others. Oil quantity is measured afterward.*

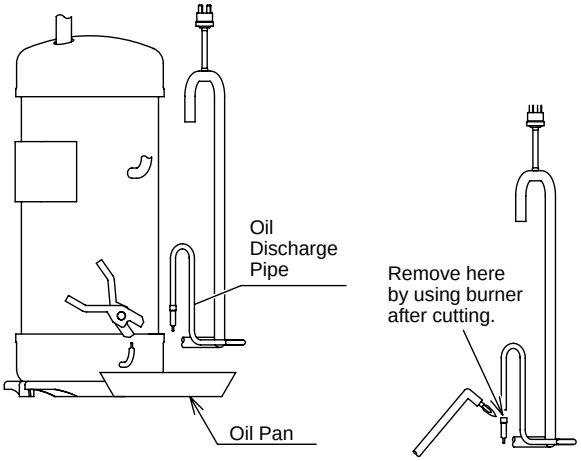

9 Removing Constant Speed Compressor (Only E1000GH)

– Removing Slide Base Fixing Screw
  Remove the two (2) screws fixing the slide base.

– Removing Compressor
  Pull the slide base with the compressor on towards front side, and remove the compressor from the slide base.

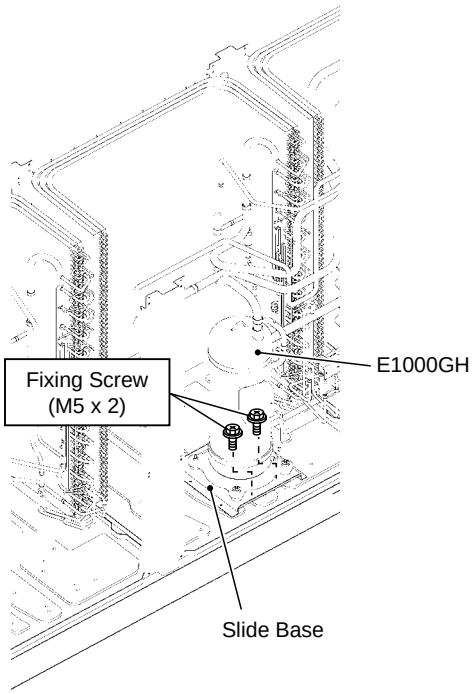

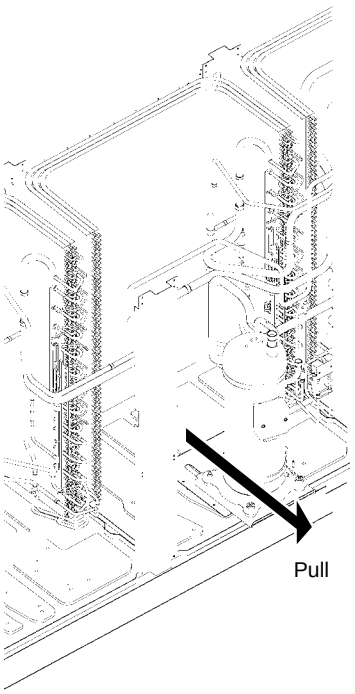

Все каталоги и инструкции здесь: https://splitsystema48.ru/instrukcii-po-ekspluatacii-kondicionerov.html

10 Remove the nuts fixing the compressor and remove the compressor.
Inverter Compressor: three (3) nuts, Constant Speed Compressor: four (4) nuts

NOTES:

1. *When removing the compressor, pay attention not to contact with surrounding pipes.*
   If contacted, pipe may deform.
2. *Pay attention not to be injured with the sheet metal edge while working.*
3. *When removing the compressor fixed with oil discharge pipe, seal the pipe ends with tapes to avoid remaining refrigerant oil spill.*
4. *Do not expose the refrigerant cycle to the environment for a long period in order to avoid mixing the water with foreign particles.*
   After removing the compressor, mount the new one quickly.

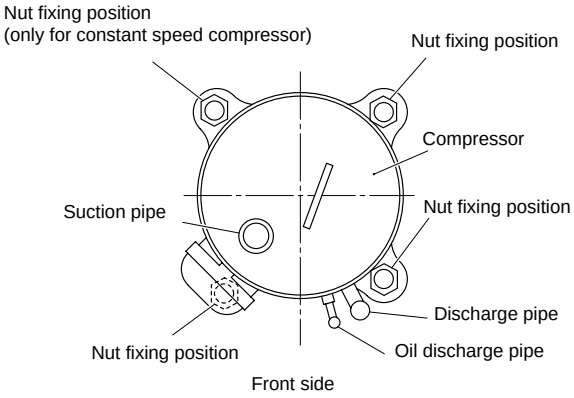

■ In case of RAS-14FSN2 to RAS-48FSN2

Special washers (silver-painted) are fixed with compressor for vibration absorption.

Never remove these special washers. Special washers are fixed with special nuts.

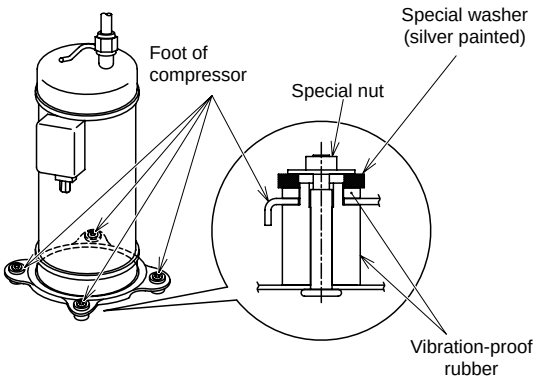

Все каталоги и инструкции здесь: https://splitsystema48.ru/instrukcii-po-ekspluatacii-kondicionerov.html

11 Take out the remaining refrigerant oil in the compressor from the discharge pipe, and measure the oil quantity. This procedure should be performed for constant speed compressor or the inverter compressor replacement.

NOTES:

1. *Additional refrigerant oil charge is required if: remaining refrigerant oil quantity in the old compressor > pre-charged refrigerant oil in the new compressor*
2. *No additional refrigerant oil charge is required if: remaining refrigerant oil quantity in the old compressor < pre-charged refrigerant oil in the new compressor*
3. *The recharged quantity of the refrigerant oil to the cycle is calculated as follows:*
   (Measured quantity + Collected quantity at the procedure (8) + 200 cc) - (Initial charged quantity in the compressor for each model)*

Compressor	Initial Charged Refrigerant Oil
For Inverter (E656DHD)	1100cc
For Constant Speed (E656DH)	1100cc
For Constant Speed (E1000GH)	1800cc

* 200 cc : This value is considered not to be removed from the chamber.

4. *If the refrigerant oil quantity can not be measured, additionally charge 300 cc.*
5. *<u>If the refrigerant oil is contaminated, exchange all of them with new refrigerant oil.</u>*

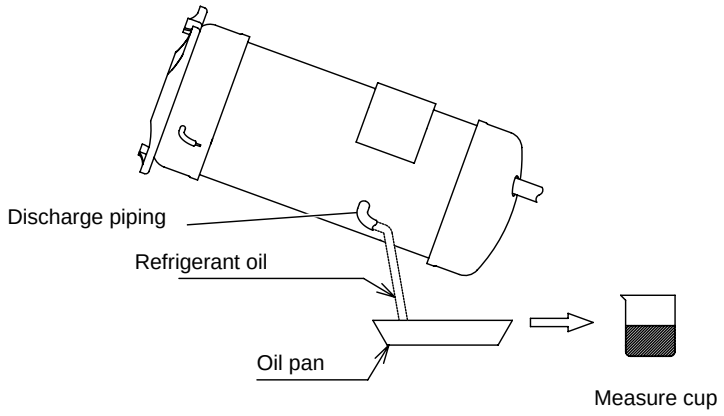

Все каталоги и инструкции здесь: https://splitsystema48.ru/instrukcii-po-ekspluatacii-kondicionerov.html

12 Mount the new compressor. When attaching the nut at the front side, pay attention not to deform the discharge piping. Perform the brazing according to the following order:

a) Oil Discharge Pipe

b) Discharge Pipe

c) Suction Pipe

NOTES:

1. *When mounting the new compressor on the base, pay attention not to contact with piping. If contacted, piping may be deformed.*
2. *The new compressor should be mounted with the cap, and remove the cap just before starting the brazing work.*
3. *Connect the charging hose with the check joint at the low pressure side to release pressure.*
4. *When brazing the suction pipe, make sure that the connecting part is firmly inserted into the compressor. The piping root is cooled in order to avoid entering the brazing material into the compressor.*

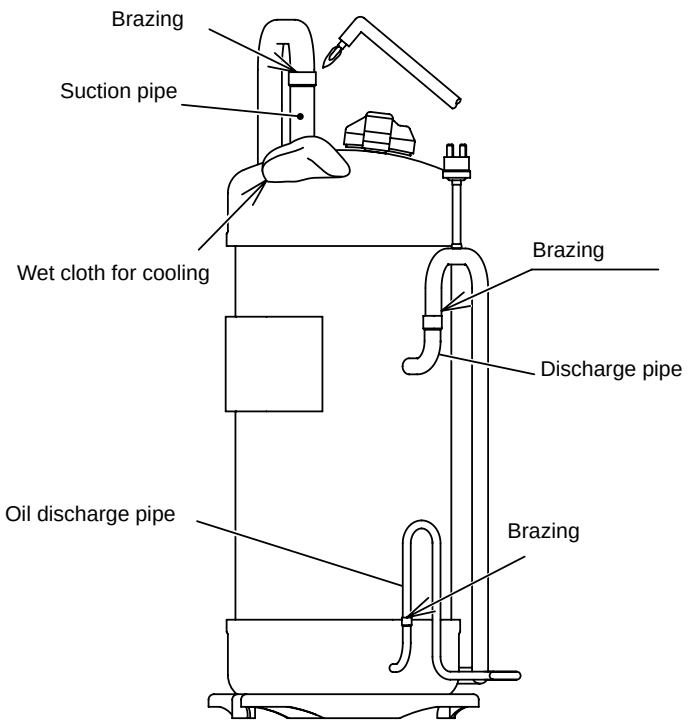

Все каталоги и инструкции здесь: https://splitsystema48.ru/instrukcii-po-ekspluatacii-kondicionerov.html

13 Charge the refrigerant oil calculated in the procedure (11) from the union(T) at the return oil circuit.
Connect the charging hose with the union while vacuuming from the check joint at the low pressure side, then start suctioning. If additional refrigerant charge is not required in the procedure (11), this work is unnecessary to perform.

NOTES:

1. *Use a clean charging hose.*
2. *Perform this work in a short time (within approximately 20 minutes) and use the container with a small opening so that the refrigerant oil does not absorb the moisture in the atmosphere.*

14 After re-connecting the union(*) at the return oil circuit, perform vacuuming and refrigerant charging.
If the test run after replacing compressor is performed, follow “Method of Collecting Refrigerant”

■ RAS-8FSN2 to RAS-12FSN2

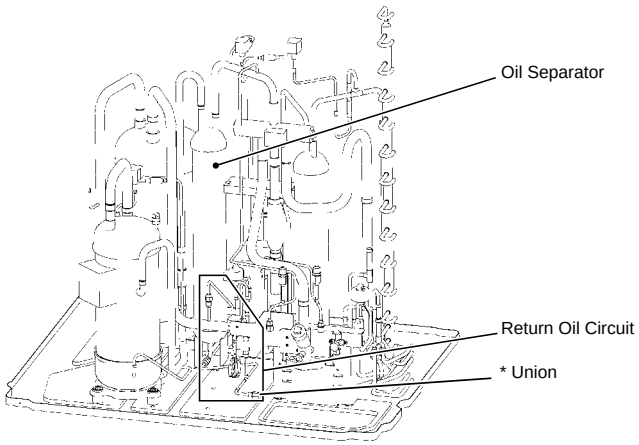

■ RAS-14FSN2 to RAS-24FSN2

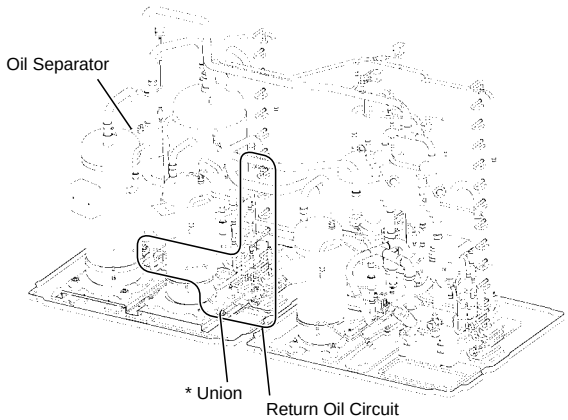

■ RAS-26FSN2 to RAS-42FSN2 (Figure for RAS-42FSN2)

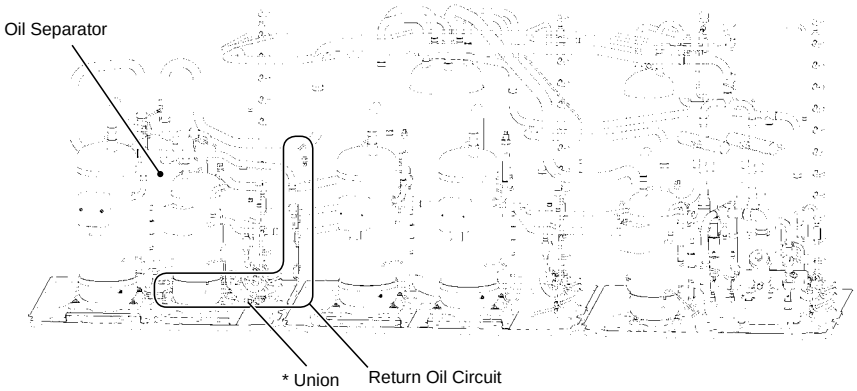

■ RAS-44FSN2 to RAS-48FSN2

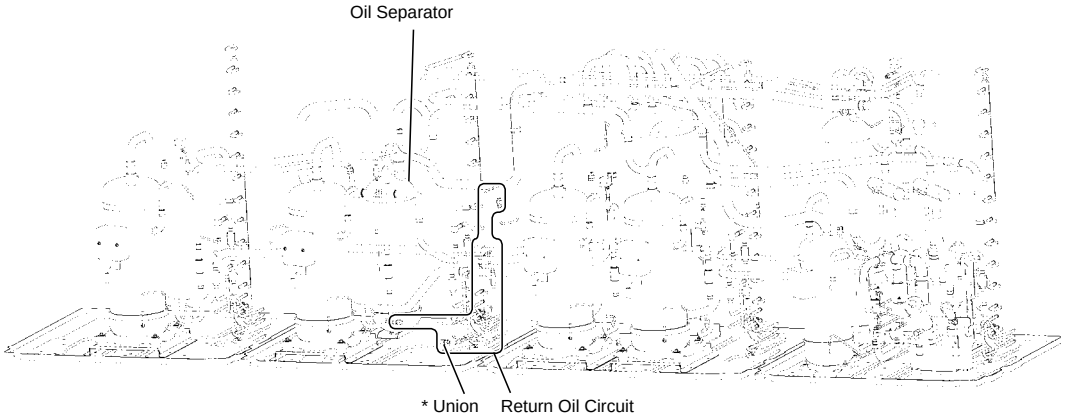

Union at Return Oil Circuit

Все каталоги и инструкции здесь: https://splitsystema48.ru/instrukcii-po-ekspluatacii-kondicionerov.html

15 Wind the oil heater around the compressor.
Oil heater mounting position: Back to the original setting (Refer to the procedure (6))

16 Attach the waterproof cover.

17 Reconnect all wires in the original positions.

– The oil heater lead wire is fixed inside the waterproof cover with the tack(*) without contacting with the power line and the piping.

– Draw the lead wire for high pressure switch (PSH) and attach the Td thermistor. Pull out the wires from the dent part at the top of waterproof cover.

NOTES:

1. *If the power line or the oil heater lead line contacts with the high temperature part such as oil discharge pipe or compressor chamber, the wire may be cut or fired. Protect the wire from overheating and protect the edge with the waterproof cover.*
2. *Check that the high pressure switch (PSH) does not contact with the waterproof cover aluminium sheet.*

Example:

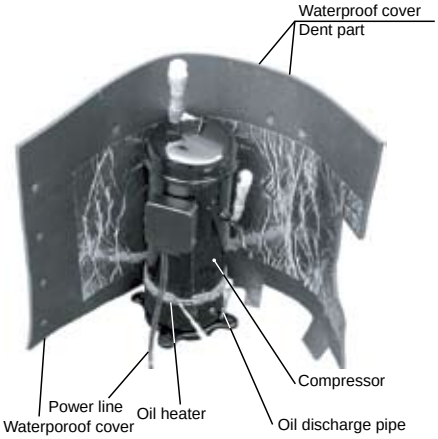

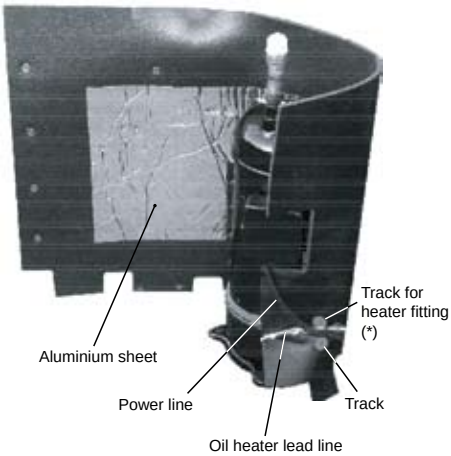

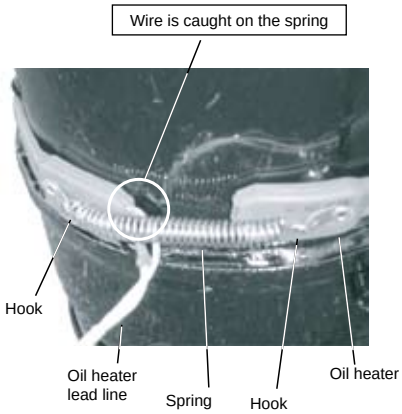

NOTES:

1. *Attach the oil heater firmly to the compressor and fix it with spring as shown in the figure.*
2. *If there is a clearance between the oil heater and the compressor due to wire overlapping, excessive heat is generated there. Then oil heater is failed due to overheating. When mounting the reassembled oil heater, this point should be taken into account.*
3. *If the oil heater lead wire is caught on the spring, the lead wire may be cut due to vibration. When reassembling, attention should be paid to the lead wire*

– Fix the cover firmly with two tacks to avoid water entering from the clearance between waterproof cover and the top cap.

Example:

Все каталоги и инструкции здесь: https://splitsystema48.ru/instrukcii-po-ekspluatacii-kondicionerov.html

18 Perform the final check for wiring conditions referring to the drawing below.

NOTE:
Check that all wires do not contact with the compressor, piping or plate edges. If it contacts, wire breakage or fire may be occurred.

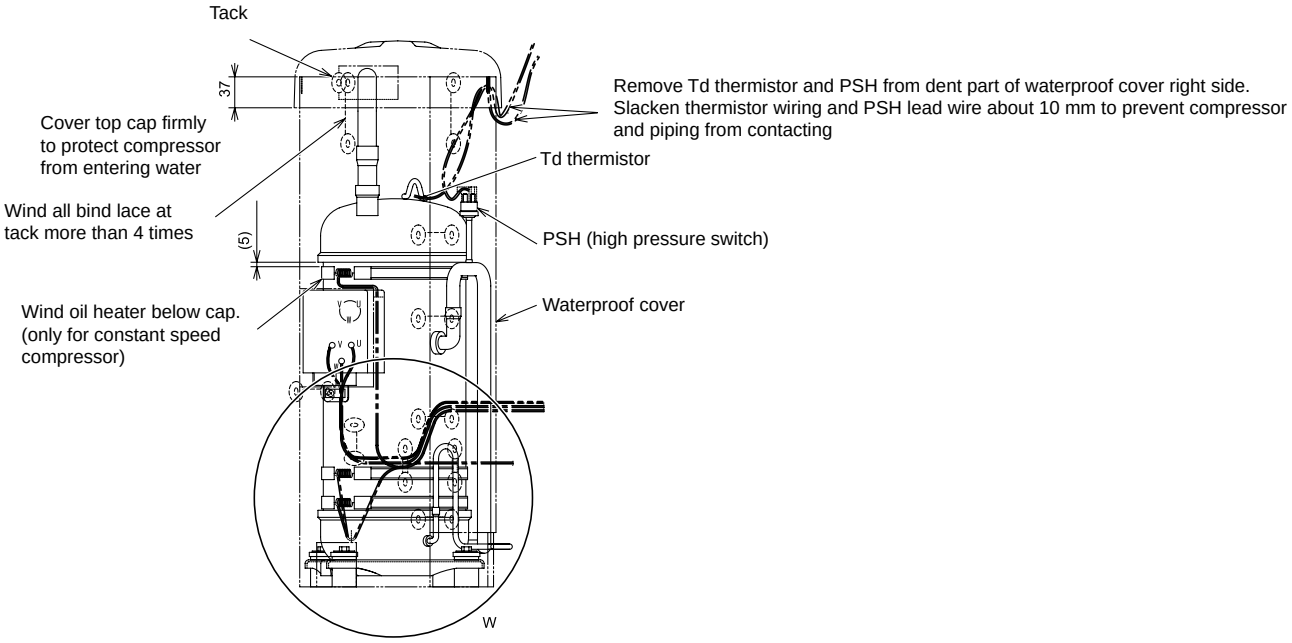

Details view from W

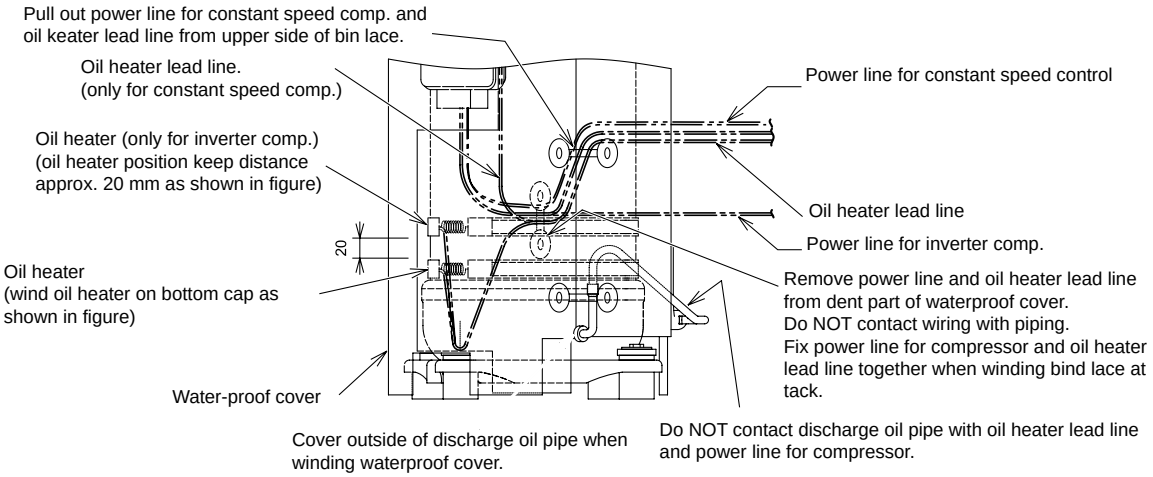

Details of inverter compressor oil heater harness wiring

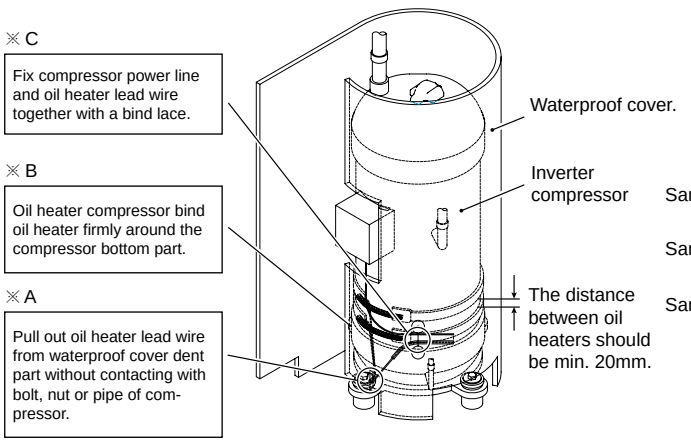

Details of constant speed compressor oil heater harness wiring

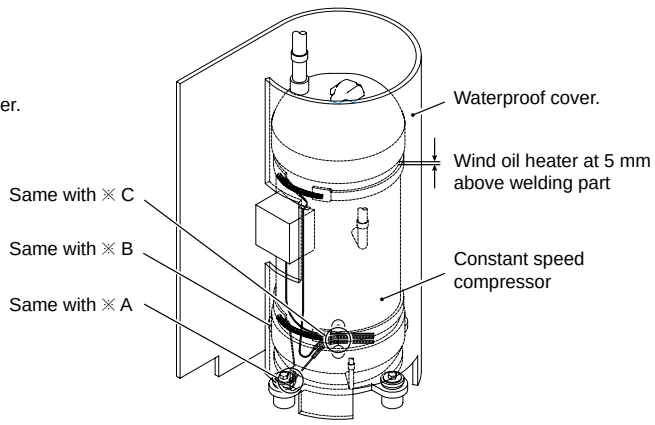

Все каталоги и инструкции здесь: https://splitsystema48.ru/instrukcii-po-ekspluatacii-kondicionerov.html

9.1.6. Replacing return oil circuit (Strainer)

Turn OFF all power source switches before starting.

1 Remove the front service panel according to the item “Removing Front Service Panel”.

2 Collect all remaining refrigerant in the refrigerant cycle through refrigerant collecting system. (Both high and low pressure sides)

3 Remove the flare nut (A) (as shown in the below figure or in the next page) connecting the return oil circuit.

NOTE:
When removing the oil separator and the flare nut at the top of return oil circuit, refrigerant oil comes out. Prepare the oil pan to receive the refrigerant oil before removing.

4 Remove the flare nut (B) (as shown in the below figure or in the next page) connecting the return oil circuit with the oil separator outlet port.

5 Attach the return oil pipe for replacement.
After replacement, charge nitrogen from the check joint at the lower pressure side.
Check that no leakage at the flare nut connection.

6 When the strainer clogging and oil color change (into black) were found at the procedure (4), oil in the oil separator should be replaced.

7 Perform vacuuming and charge the refrigerant.
When the strainer clogging and oil color change (into black) are found, oil in the oil separator should be replaced according to the following procedure.

■ Replacing oil for oil separator

a Collect all remaining refrigerant in the refrigerant cycle through refrigerant collecting system. (Both high and low pressure sides)

b Remove the flare nut connecting return oil circuit with the oil separator outlet port.
Connect the charging hose to the union (size 1/4 inch) at the oil separator outlet port.

c Discharge the oil in the oil separator from the check joint at the high pressure side with charging nitrogen and applying pressure.

d Stop charging nitrogen after the oil discharge has completed. Additionally charge the same quantity of oil discharged while vacuuming from the check joint at the high pressure side.

e After above procedures are completed, perform the vacuuming again and recharge the refrigerant.

NOTES:
1. Use a clean charging hose.
2. Perform this work in a short time (within approximately 20 minutes) and use the container with a small opening so that the refrigerant oil does not absorb the moisture in the atmosphere.

RAS-8FSN2 to RAS-12FSN2

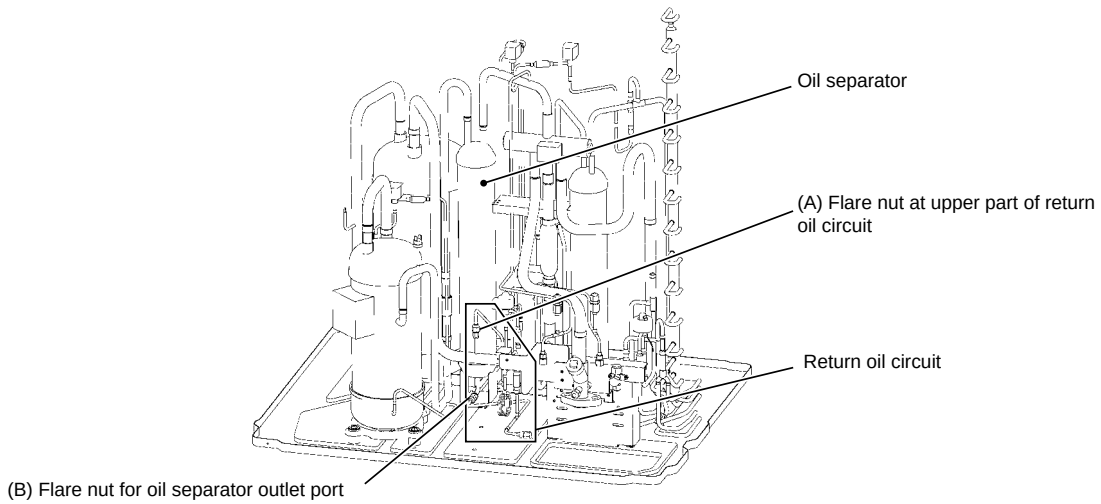

Return Oil Circuit Position

Все каталоги и инструкции здесь: https://splitsystema48.ru/instrukcii-po-ekspluatacii-kondicionerov.html

RAS-14FSN2 to RAS-24FSN2

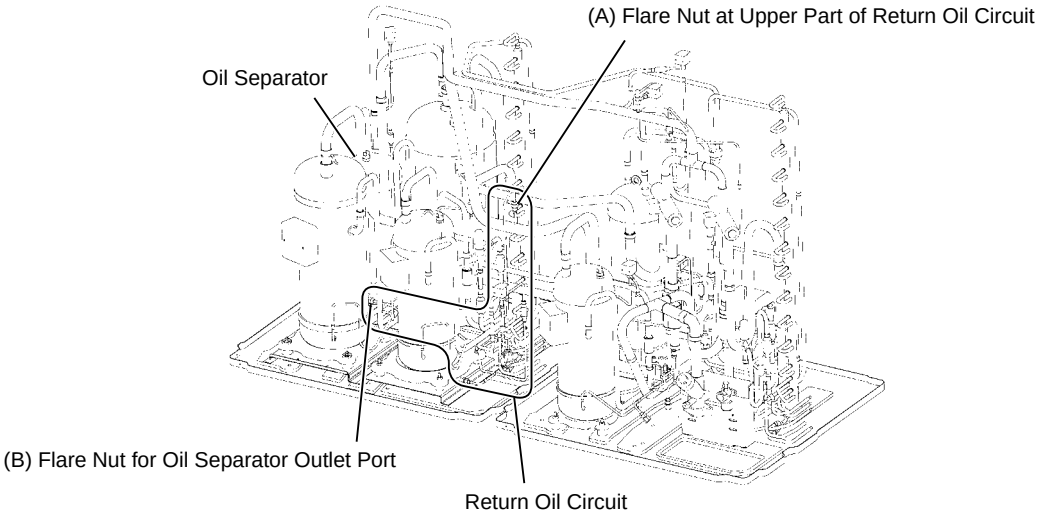

RAS-26FSN2 to RAS-42FSN2
(figure for RAS-42FSN2)

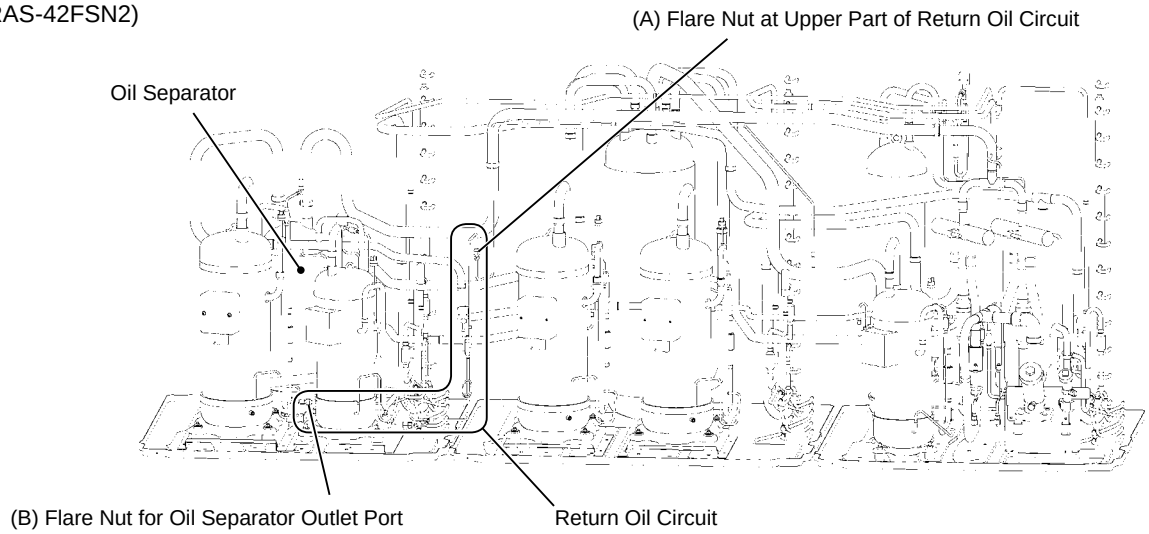

RAS-44FSN2 to RAS-48FSN2

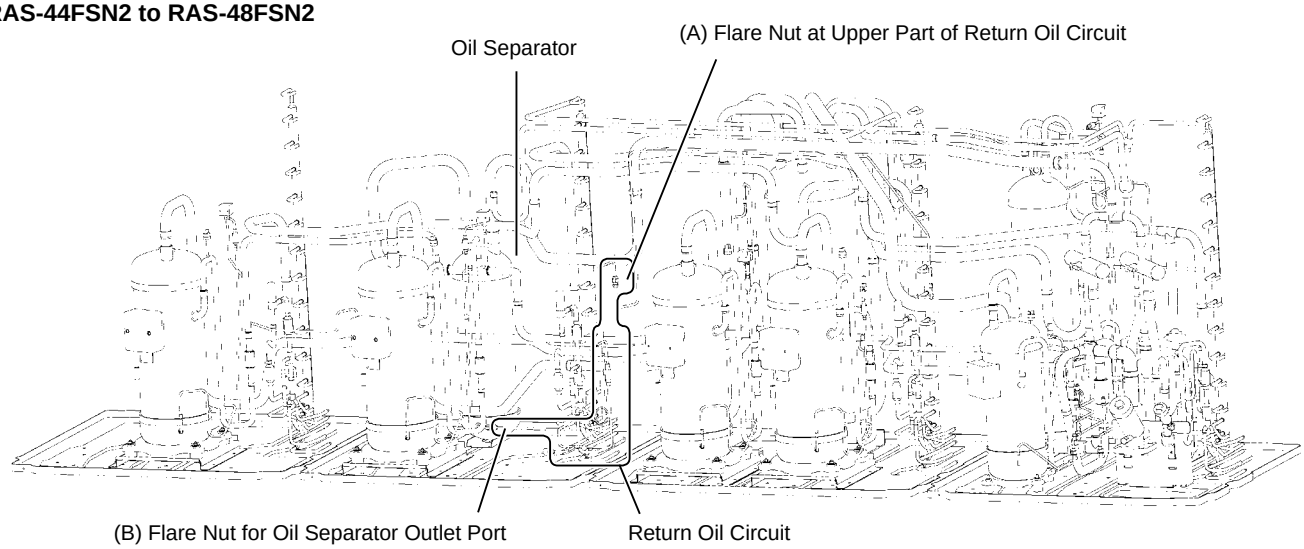

Return Oil Circuit Position

Все каталоги и инструкции здесь: https://splitsystema48.ru/instrukcii-po-ekspluatacii-kondicionerov.html

9.1.7. Removing high pressure switch, high pressure sensor and low pressure sensor

1 Remove the front service panel according to Item “Removing front service panel”.

2 High pressure switch / pressure sensor fixing position.
High pressure switch, high pressure sensor and low pressure sensor are fixed as shown in the figure.

RAS-8FSN2 to RAS-12FSN2

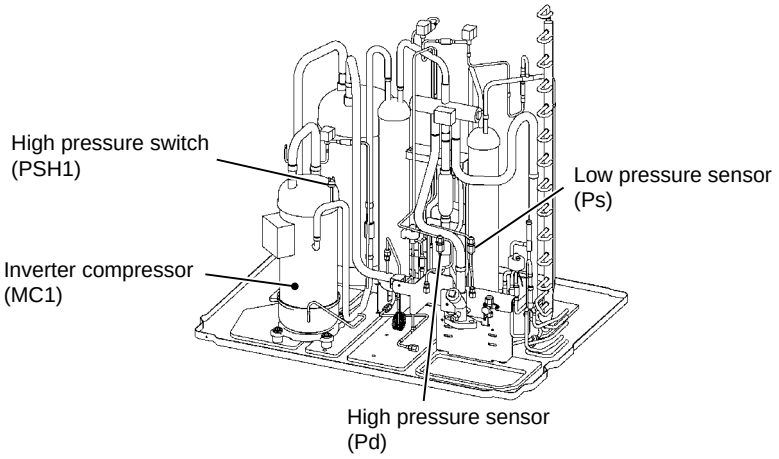

RAS-14FSN2 to RAS-24FSN2
(figure for RAS-24.FSN2)

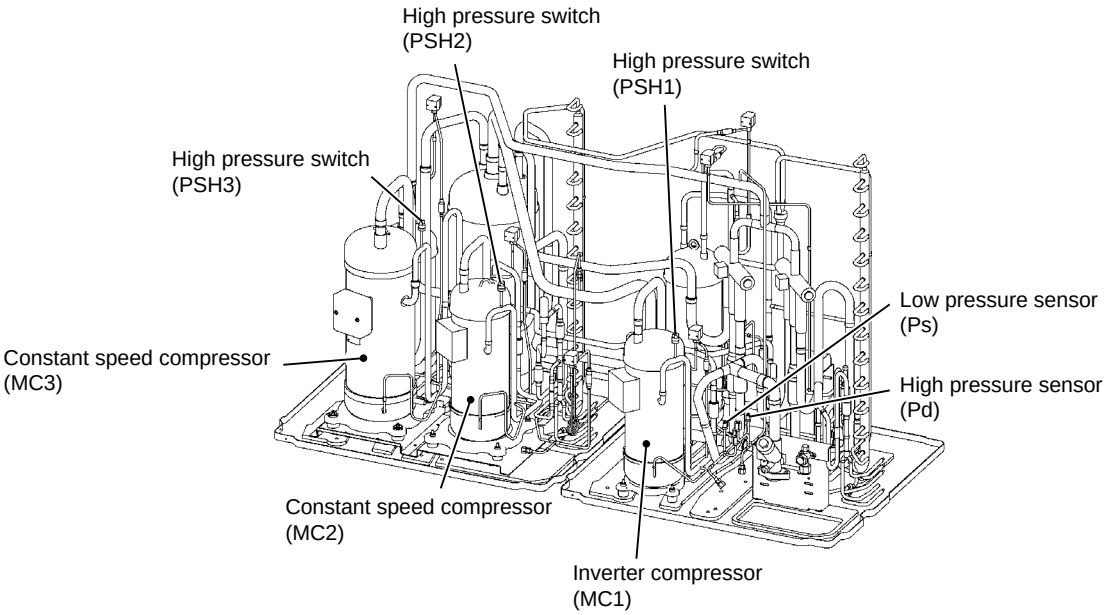

High pressure switch, high/low pressure sensor position

Все каталоги и инструкции здесь: https://splitsystema48.ru/instrukcii-po-ekspluatacii-kondicionerov.html

RAS-26FSN2 to RAS-42FSN2
(figure for RAS-42.FSN2)

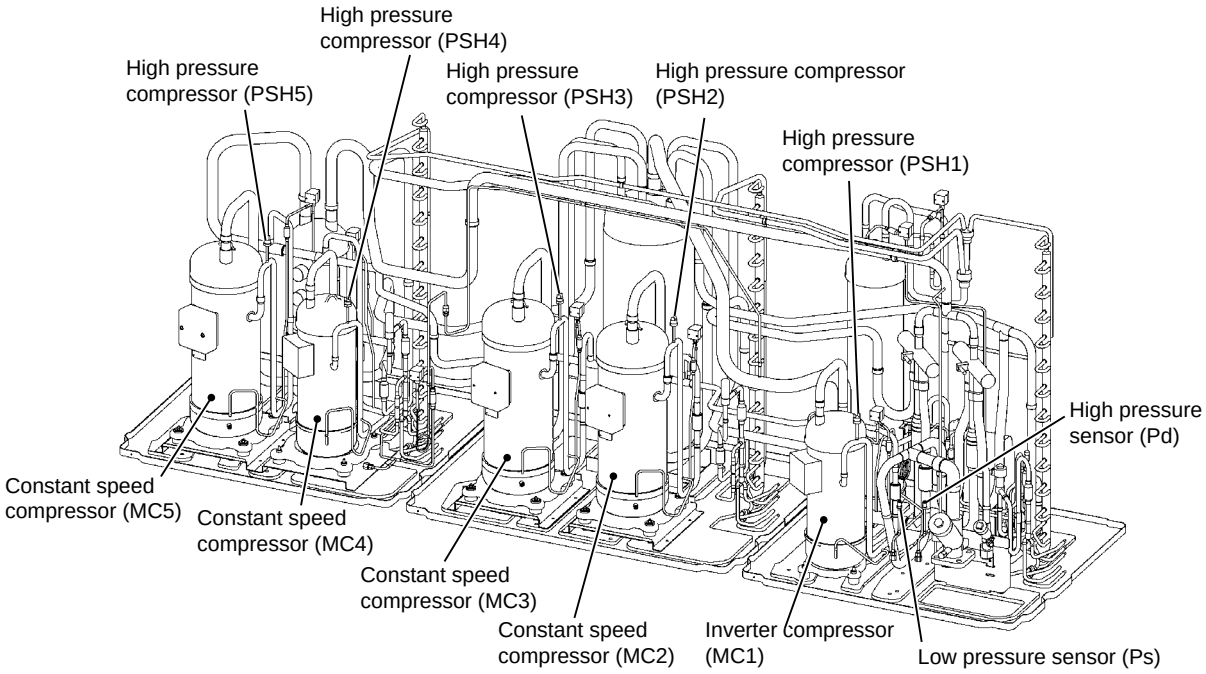

RAS-42FSN2 to RAS-48FSN2

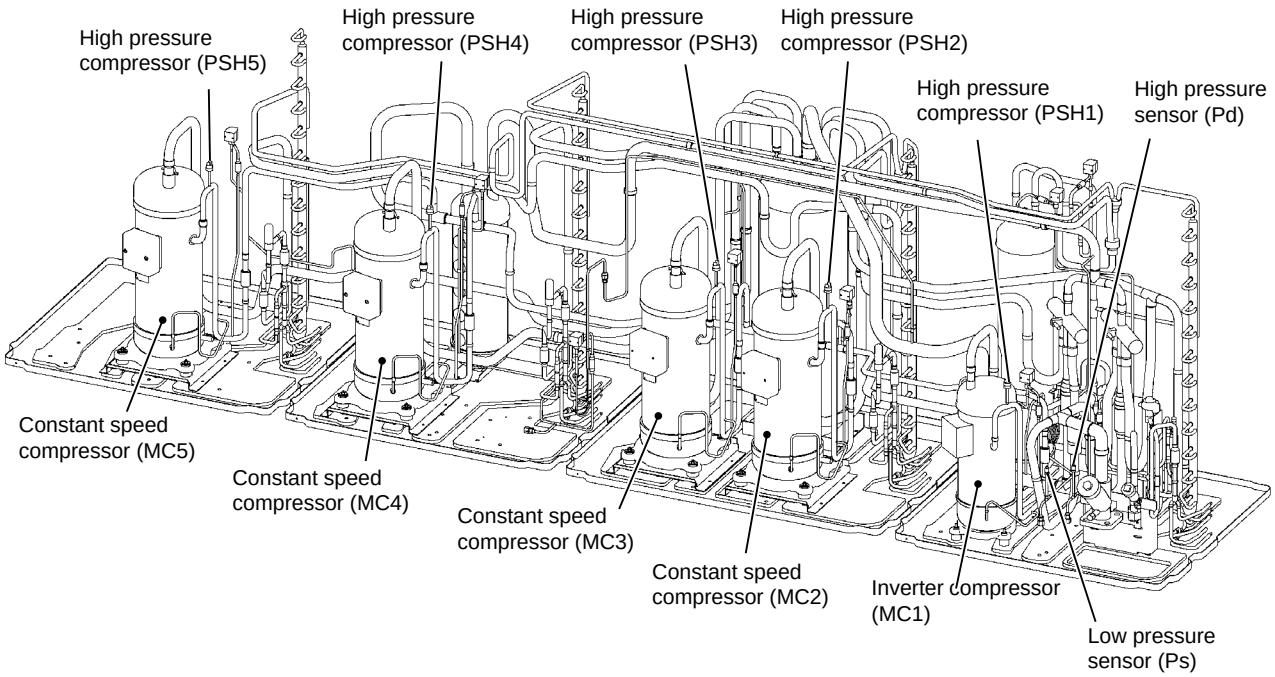

High pressure switch, high/low pressure sensor position

Все каталоги и инструкции здесь: https://splitsystema48.ru/instrukcii-po-ekspluatacii-kondicionerov.html

■ Removing high pressure switch

1 Collect the refrigerant.

2 Disconnect the faston terminals.

3 Remove the high pressure switch from the brazing part of the discharge pipe by use of a burner.

NOTES:

– *If the refrigerant cycle is left for some time after compressor is removed, moisture and dirt will enter into it. Reassemble the alternative compressor immediately after removing. If it is impossible by necessity, seal the pipe ends with tapes.*

– *Check that the waterproof cover inner side (aluminium sheet) does not contact with the terminals of the high pressure switch.*

– *Make sure to fix the insulating sleeve of the faston terminals as shown in the figure.*
If the terminals of the high pressure switch is exposed and contacts with the waterproof cover, the electrical components may be damaged.

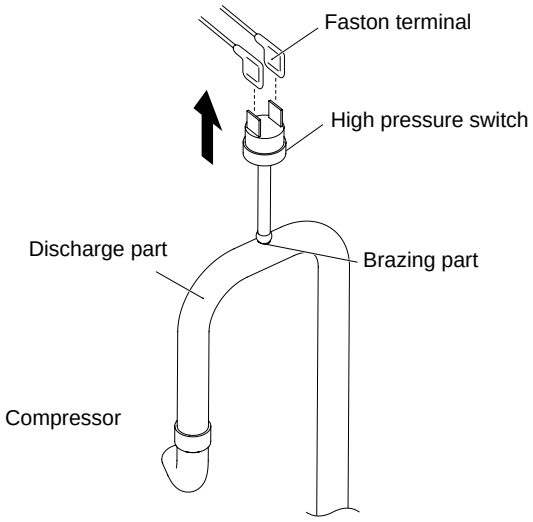

■ Removing high pressure sensor and low pressure sensor

1 Remove the connector for the pressure sensor wiring from PCB1.

NOTE:
Remove the connector firstly. If not, the wiring may be damaged.

2 Remove the refrigerant piping for the high pressure sensor or low pressure sensor by use of two spanners.

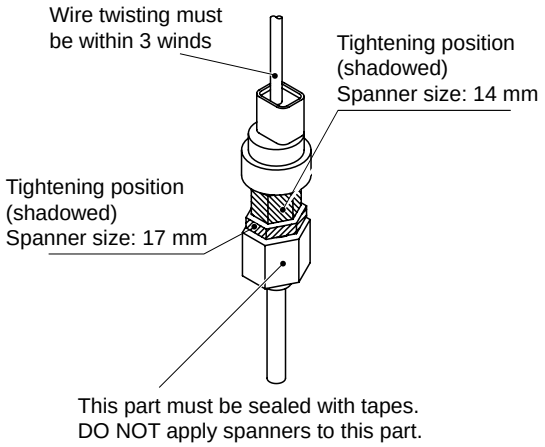

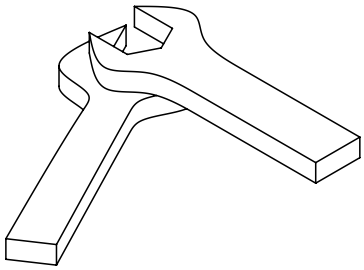

Using two spanners

Tightening torque: 30 Nm

Все каталоги и инструкции здесь: https://splitsystema48.ru/instrukcii-po-ekspluatacii-kondicionerov.html

9.1.8. Removing reversing valve and removing reversing valve coil

1 Remove the front service panel according to the item “Removing Front Service Panel”.

2 The reversing valve fixing position is as shown in the figure.

RAS-8FSN2 to RAS-12FSN2
(figure for RAS-12FSN2)

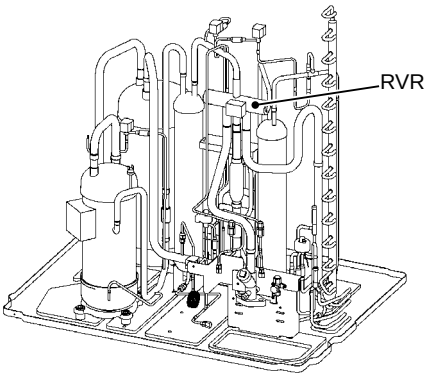

RAS-14FSN2 to RAS-24FSN2
(figure for RAS-24FSN2)

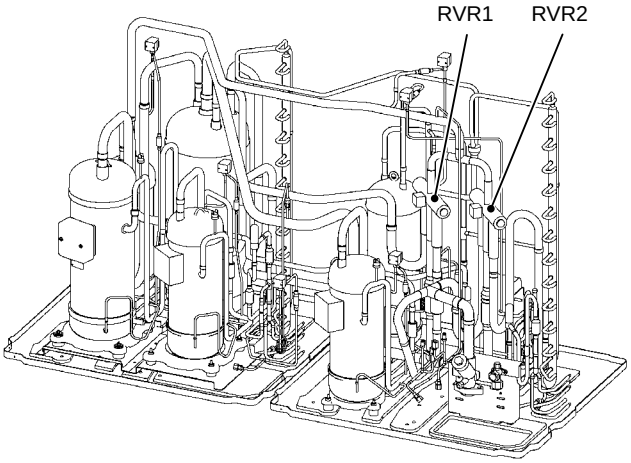

RAS-26FSN2 to RAS-42FSN2
(figure for RAS-42FSN2)

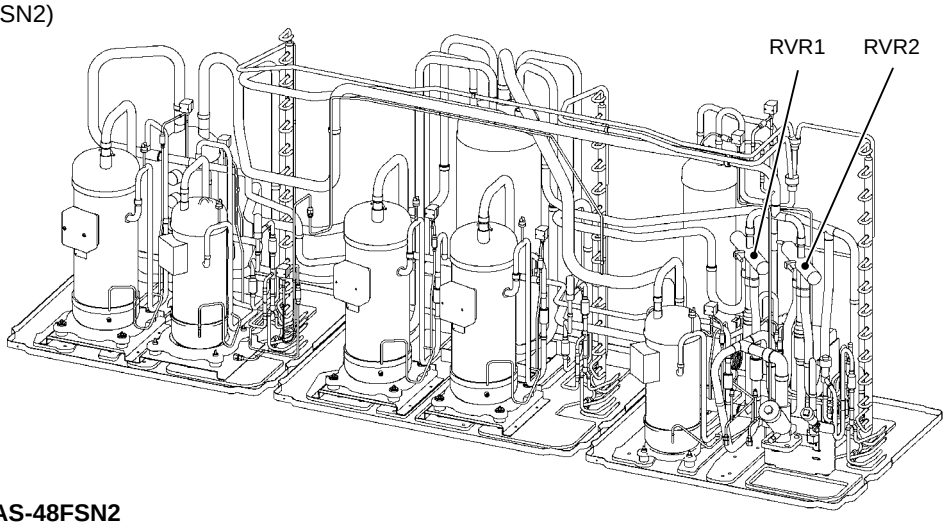

RAS-44FSN2 to RAS-48FSN2
(figure for RAS-48FSN2)

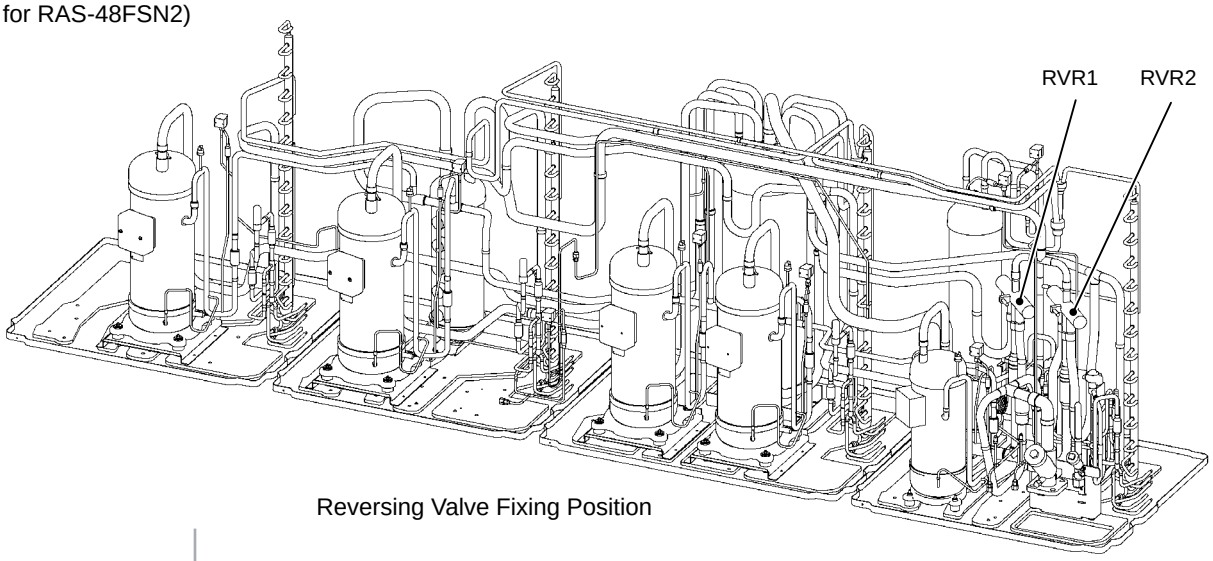

Reversing Valve Fixing Position

Все каталоги и инструкции здесь: https://splitsystema48.ru/instrukcii-po-ekspluatacii-kondicionerov.html

■ Removing reversing valve

1 Before starting this work, collect the refrigerant into a cylinder from the refrigerant cycle, and turn OFF the power source of the unit.
2 Remove the four (4) screws fixing the electrical control box cover. Remove the electrical control box cover.
3 Disconnect the connecting wiring for reversing valve coil.
4 Remove the reversing valve coil according to the item “Removing Reversing Valve Coil”.
5 Remove the brazing as shown in the figure by covering the reversing valve with wet cloth for cooling.

NOTE:
Remove the brazing only at the indicated portion in the figure. If not, leakage may occur when reassembling.

RAS-8FSN2 to RAS-12FSN2

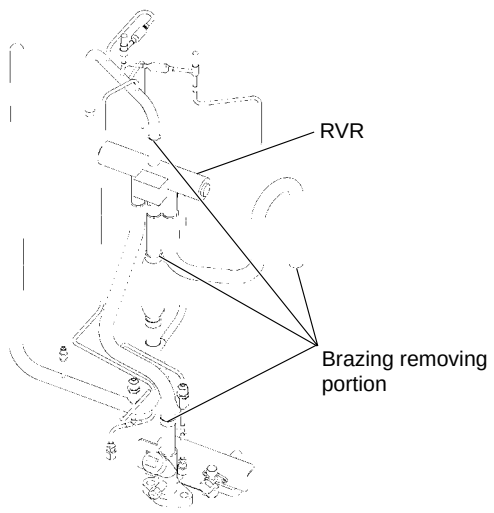

RAS-14FSN2 to RAS-24FSN2

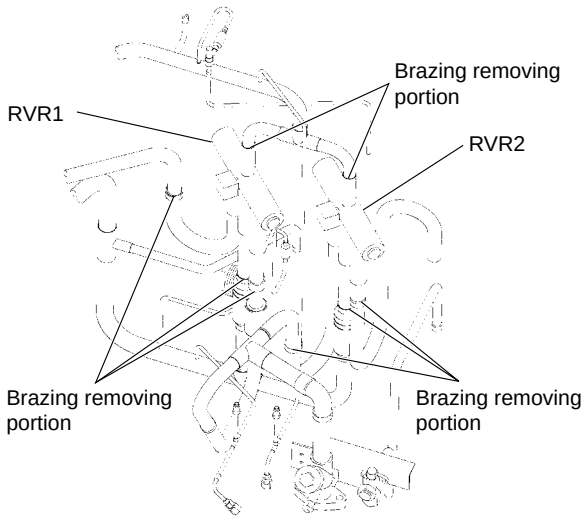

RAS-26FSN2 to RAS-48FSN2

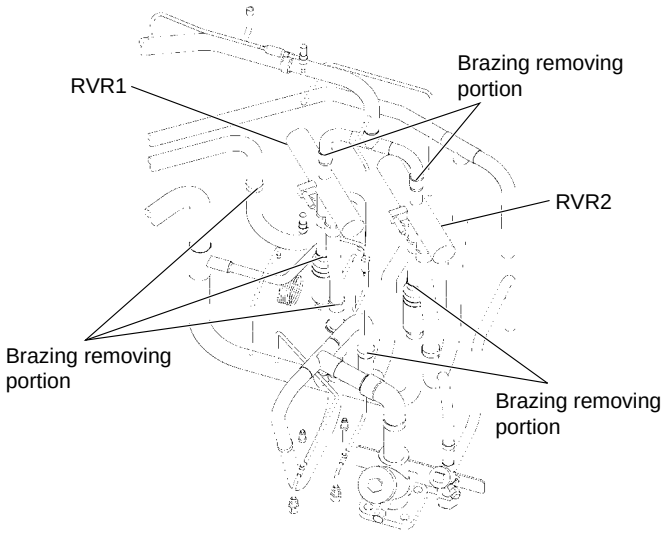

Все каталоги и инструкции здесь: https://splitsystema48.ru/instrukcii-po-ekspluatacii-kondicionerov.html

6 Remove the reversing valve assembly.
Remove the brazing as shown in the figure by covering the reversing valve with wet cloth for cooling.

Remove the brazing in the following order:

a Brazing at right and left branch pipes of three pipes from the reversing valve.

b Brazing at the centre branch pipe of three pipes from the reversing valve.

NOTE:
When removing brazing, cover the reversing valve with wet cloth for cooling.

Reversing valve RVR2
(figure for RAS-48FSN2)

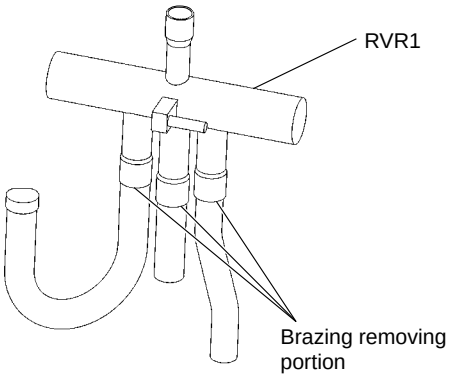

Reversing valve RVR1
(figure for RAS-48FSN2)

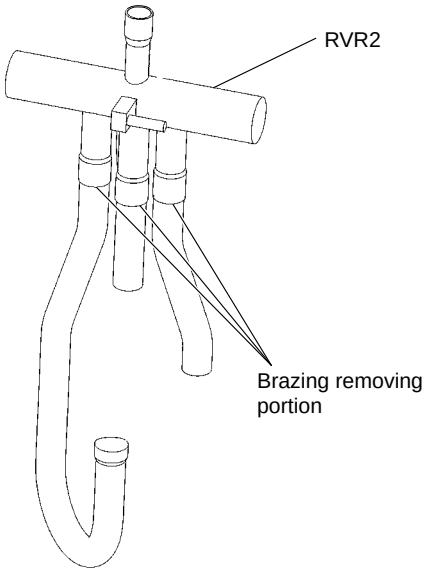

■ Removing Reversing Valve Coil

1 Remove the one (1) screw fixing the reversing valve coil.
If the portion is difficult to remove brazing with a Phillips screwdriver, use a spanner or an adjustable wrench.

2 Remove the reversing valve coil.

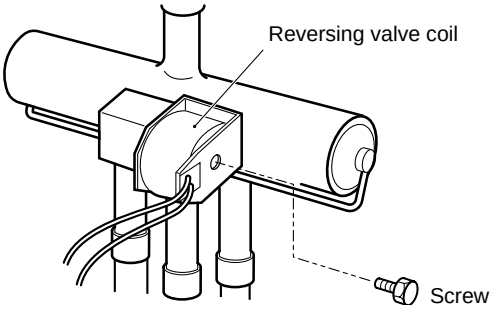

This is the unit front view.

Все каталоги и инструкции здесь: https://splitsystema48.ru/instrukcii-po-ekspluatacii-kondicionerov.html

9.1.9. Removing solenoid valve and solenoid valve coil

Remove the front service panel according to the item “Removing Front Service Panel”.

■ **Removing Solenoid Valve**

1 Collect the refrigerant from the check joint.

2 Remove the solenoid valve coils according to the item “Removing Solenoid Valve Coil”.

3 Remove the brazing at the following portions:

Solenoid Valve (SVA1 to 5): 2 brazing portions for each valve

Solenoid Valve (SVB): 2 brazing portions

Solenoid Valve (SVC): 2 brazing portions

Solenoid Valve (SVG): 2 brazing portions (Only for RAS-14FSN2 to RAS-48FSN2)

(a) When removing brazing, cover the solenoid valve with wet cloth for cooling.

(b) Pay attention not to burn the connecting wiring and piping insulation while brazing.

4 Reassemble the solenoid valve in the reverse procedure for removing.

RAS-8FSN2 to RAS-12FSN2

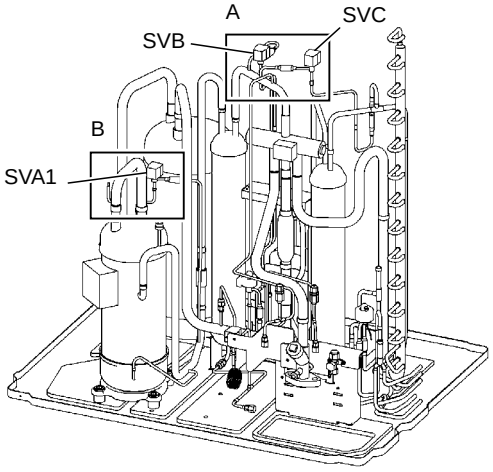

Detailed figures

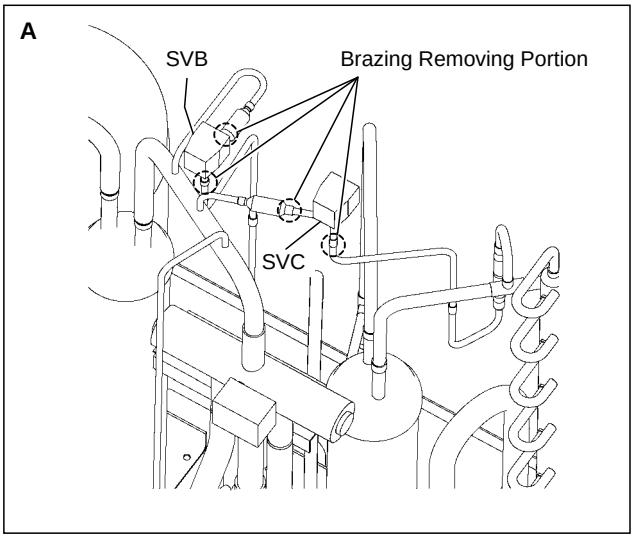

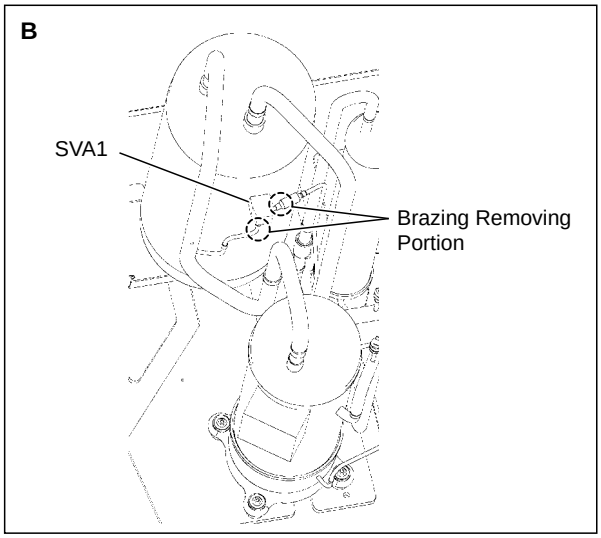

Все каталоги и инструкции здесь: https://splitsystema48.ru/instrukcii-po-ekspluatacii-kondicionerov.html

RAS-14FSN2 to RAS-24FSN2
(figure for RAS-24FSN2

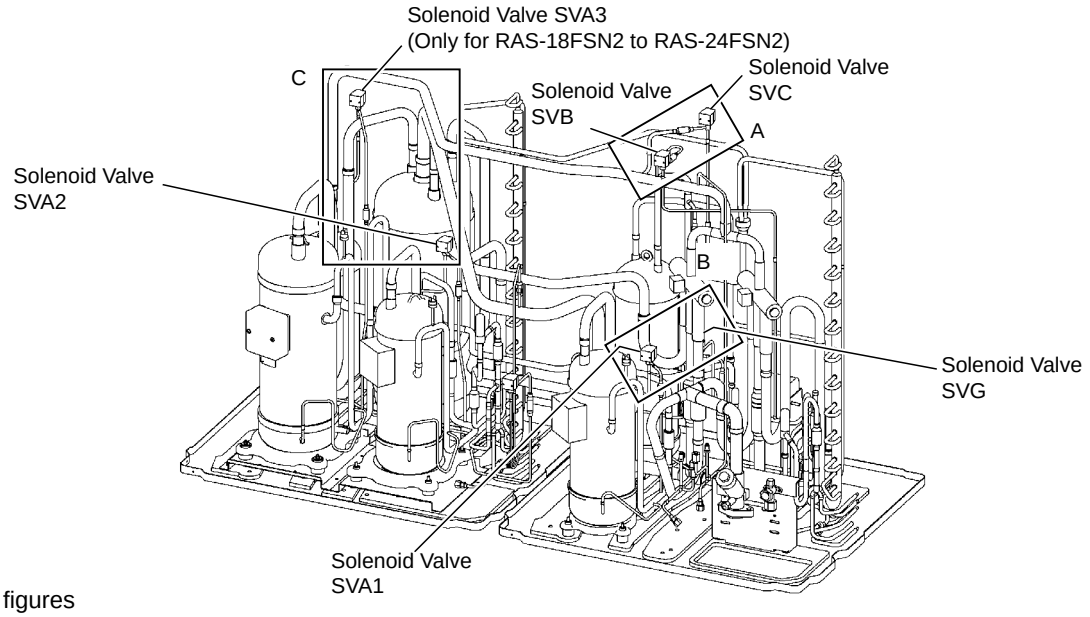

Detailed figures

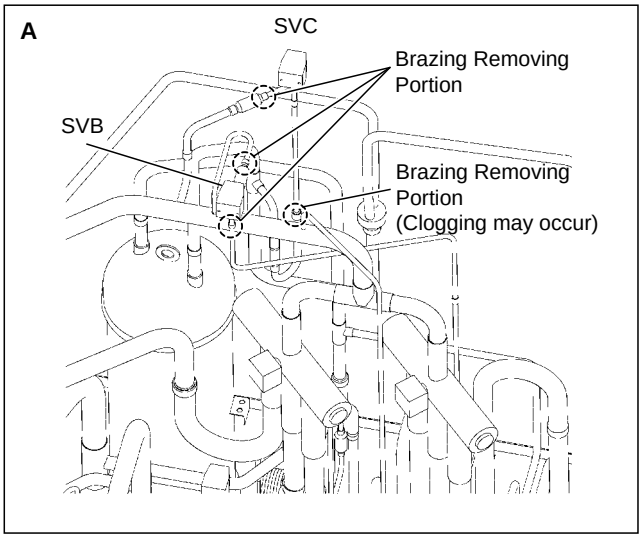

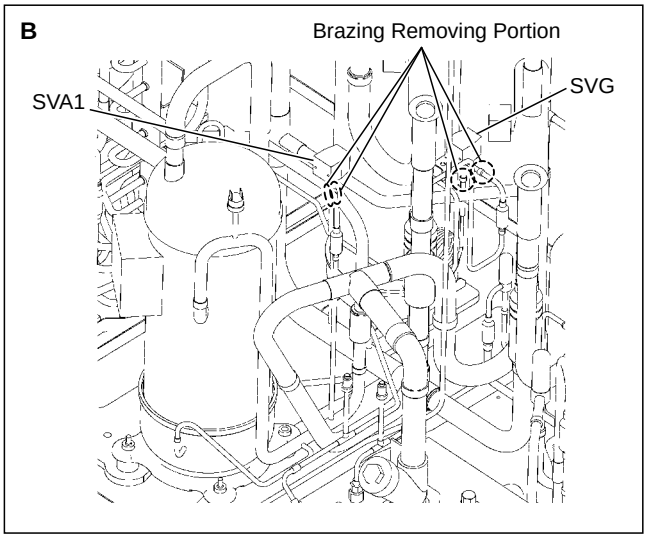

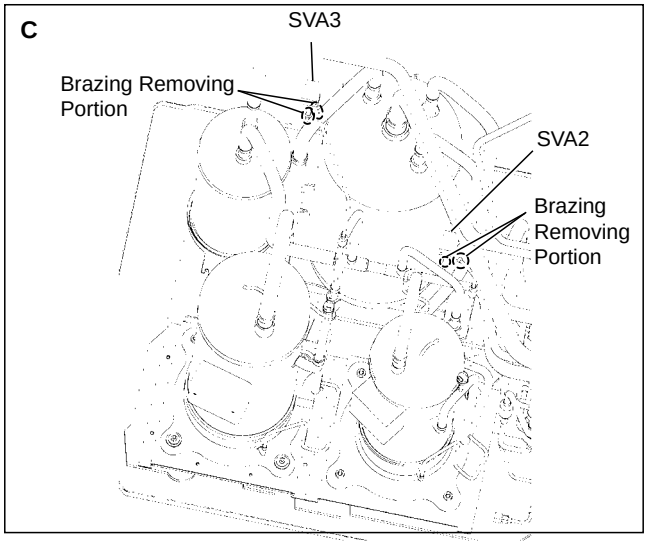

Все каталоги и инструкции здесь: https://splitsystema48.ru/instrukcii-po-ekspluatacii-kondicionerov.html

RAS-26FSN2 to RAS-42FSN2
(figure for RAS-42FSN2)

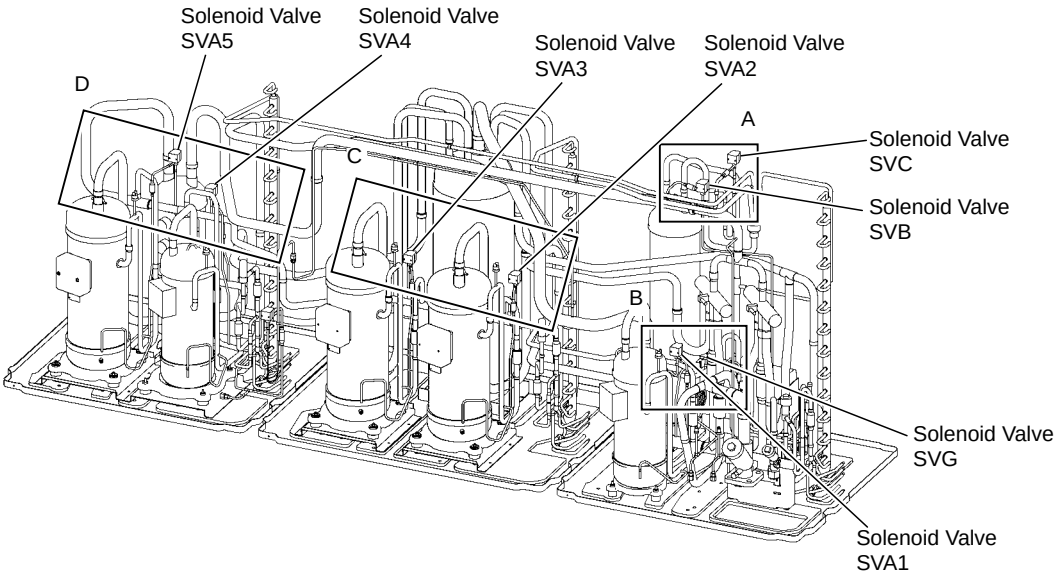

Detailed figures

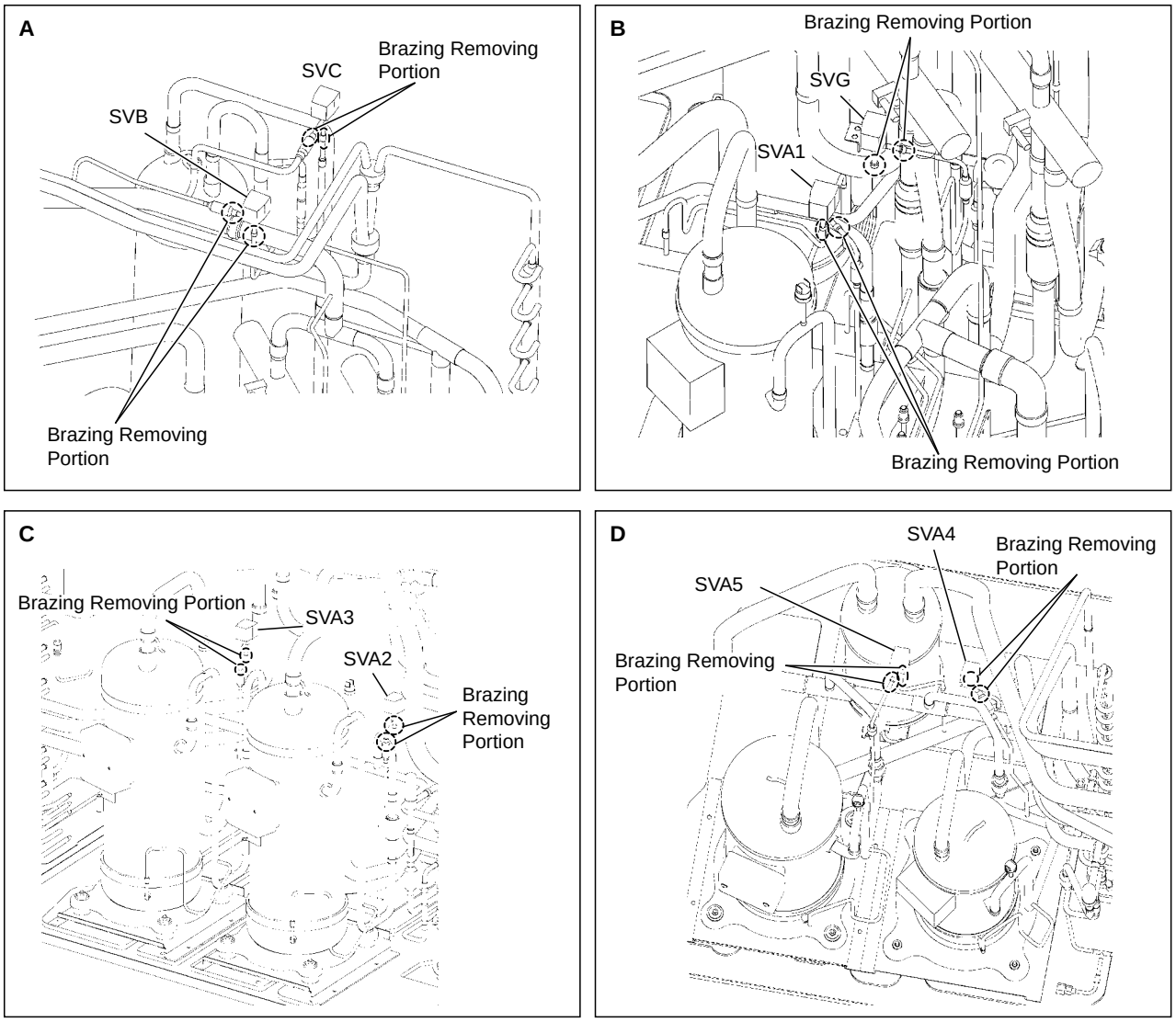

Все каталоги и инструкции здесь: https://splitsystema48.ru/instrukcii-po-ekspluatacii-kondicionerov.html

RAS-44FSN2 to RAS-48FSN2

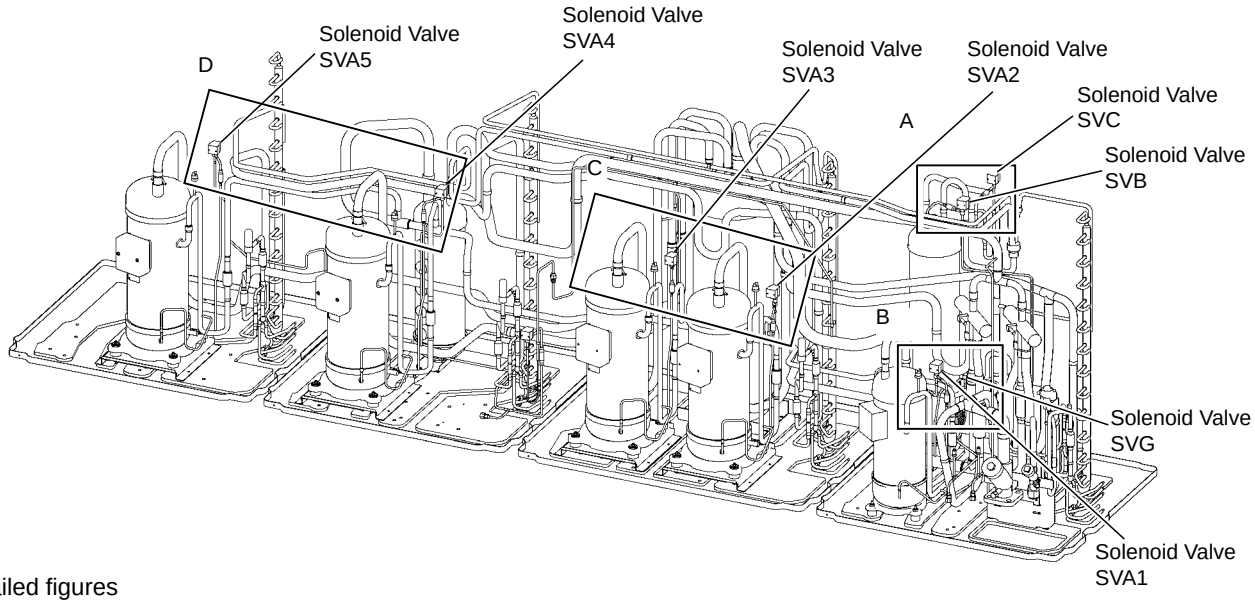

Detailed figures

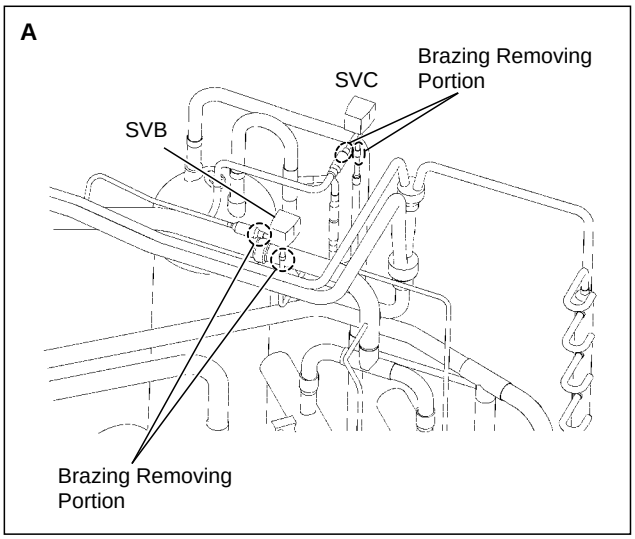

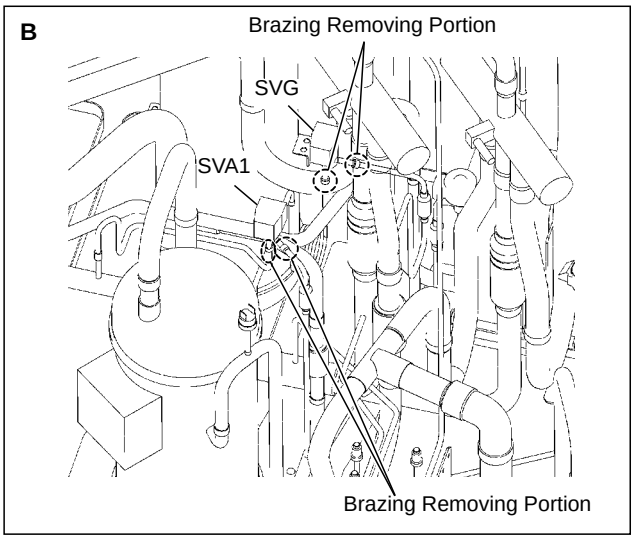

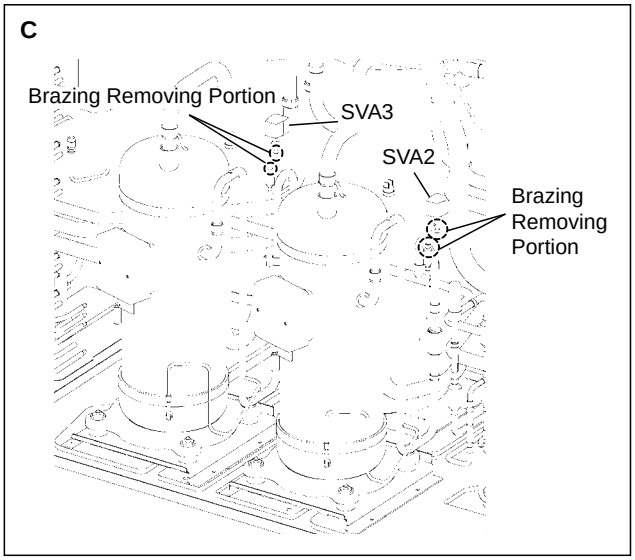

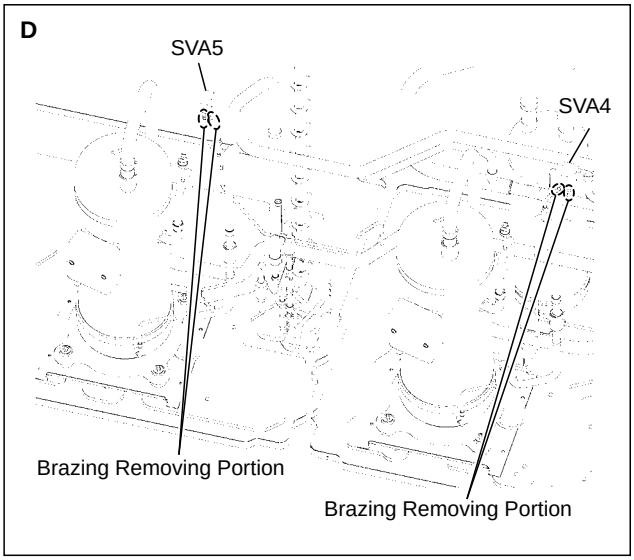

Все каталоги и инструкции здесь: https://splitsystema48.ru/instrukcii-po-ekspluatacii-kondicionerov.html

■ **Removing solenoid valve coil**

1 Remove one (1) screw fixing the solenoid valve coil. If the portion is difficult to remove brazing with a Phillips screwdriver, use a spanner or an adjustable wrench.
   – The adhesive was applied to the fixing screw for the solenoid valve coil before shipment to prevent looseness during transportation.
2 Remove the screw fixing the solenoid valve, and remove the solenoid valve.
3 Remove the solenoid valve stay firstly before removing coils (SVA1 to 5, SVB, SVC, SVG and SVF).

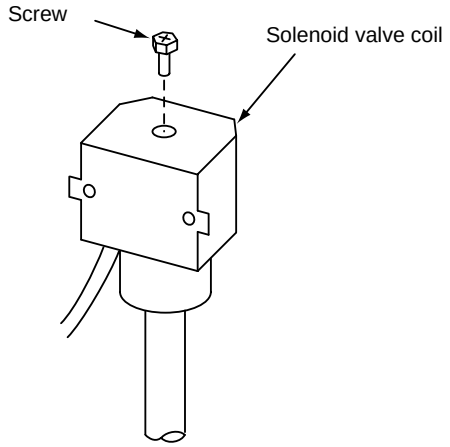

9.1.10. Replacing oil separator, liquid tank and accumulator

Before starting this work, turn OFF the power source of the unit.

1 Remove the front service panel according to the item “Removing front service panel”.
2 Collect all remaining refrigerant in the refrigerant cycle through refrigerant collecting system. (Both high and low pressure sides).
3 Disconnect the piping connected with oil separator, liquid tank and accumulator.
4 Removing oil separator, liquid tank and accumulator: Before replacing the liquid tank, remove the electrical control box, upper cover, fan motor and motor clamp.

Все каталоги и инструкции здесь: https://splitsystema48.ru/instrukcii-po-ekspluatacii-kondicionerov.html

■ **Removing oil separator**

1 Loosen two (2) screws at the oil separator rear side through the space between oil separator and accumulator with a Phillips screwdriver.
The back side of the oil separator bottom plate are U-shaped dent structure. Only loosening the screws, oil separator is removed at the bottom back side.

NOTE:
Pay attention not to be injured with the plate edge or the heat exchanger fins.

2 Remove two (2) screws fixing at the oil separator front side.

3 Pull out the oil separator to front side and remove the screws at back side.

4 Remove the oil separator from the outdoor unit.

NOTE:
If the oil is collected from the oil separator before removing, refer to the item "Replacing return oil circuit (strainer)".

RAS-8FSN2 to RAS-12FSN2

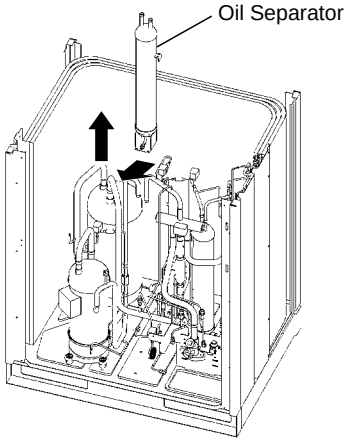

RAS-14FSN2 to RAS-28FSN2

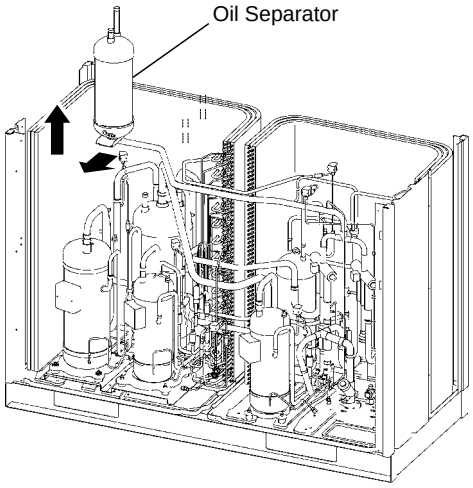

RAS-30FSN2 to RAS-48FSN2
(figure for RAS-48-FSN2)

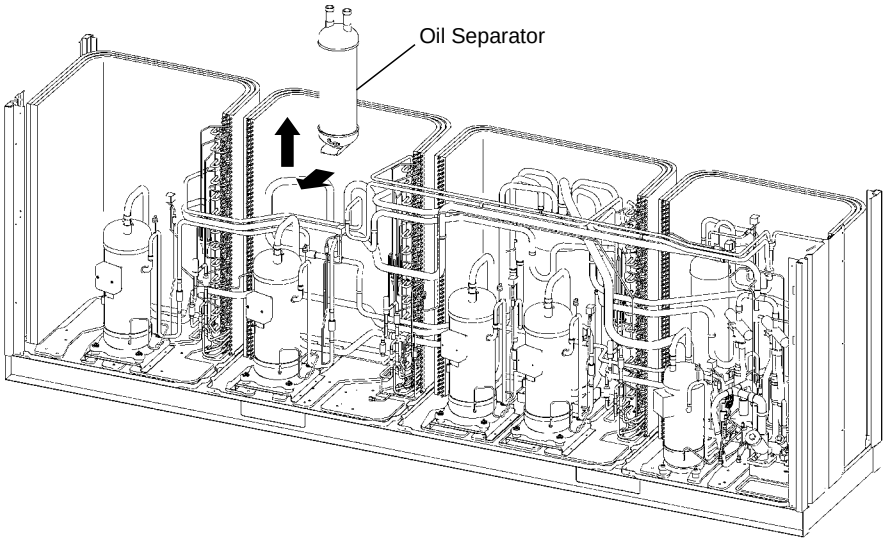

Все каталоги и инструкции здесь: https://splitsystema48.ru/instrukcii-po-ekspluatacii-kondicionerov.html

■ **Removing liquid tank**

1 Loosen two (2) screws at the liquid tank rear side from the liquid tank right side with a Phillips screwdriver. The back side of the liquid tank bottom plate are U-shaped dent structure. Only loosening the screws, liquid tank is removed at the bottom back side.

NOTE:
Pay attention not to be injured with the plate edge or the heat exchanger fins.

2 Remove two (2) screws fixing at the liquid tank front side.

3 Pull out the liquid tank to front side and remove the screws at back side.

4 Remove the liquid tank from the outdoor unit.

RAS-8FSN2 to RAS-12FSN2

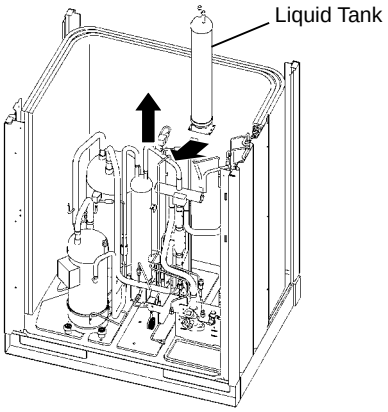

RAS-14FSN2 to RAS-28FSN2

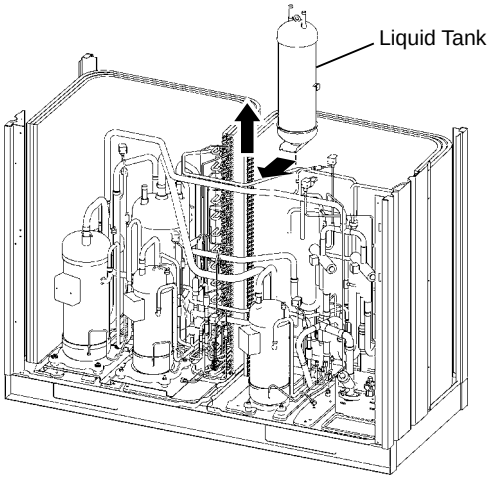

RAS-30FSN2 to RAS-48FSN2
(figure for RAS-48-FSN2)

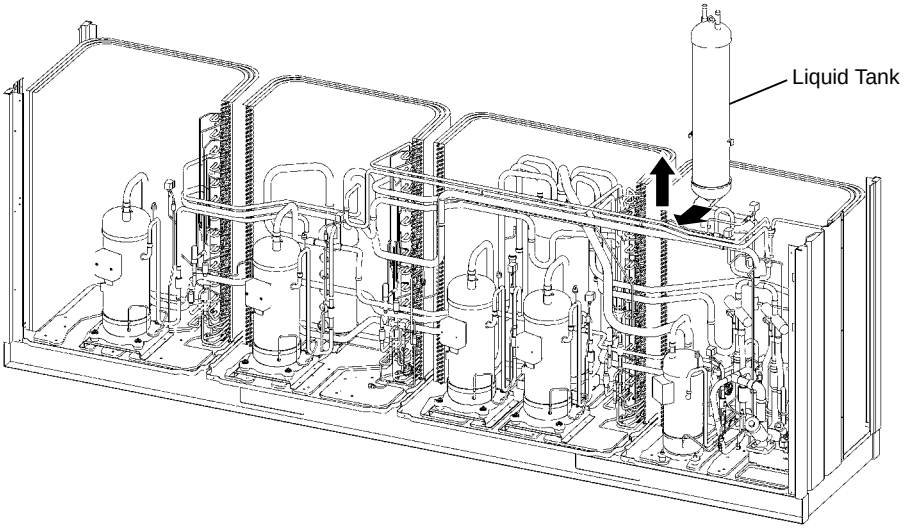

Все каталоги и инструкции здесь: https://splitsystema48.ru/instrukcii-po-ekspluatacii-kondicionerov.html

■ **Removing accumulator**

1 Remove four (4) screws fixing the accumulator.

2 Hoist up the accumulator vertically from the outdoor unit by use of crane and so on.

RAS-8FSN2 to RAS-12FSN2

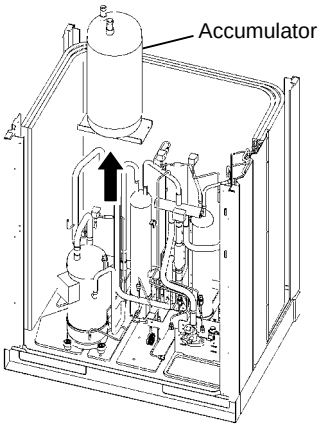

RAS-14FSN2 to RAS-28FSN2

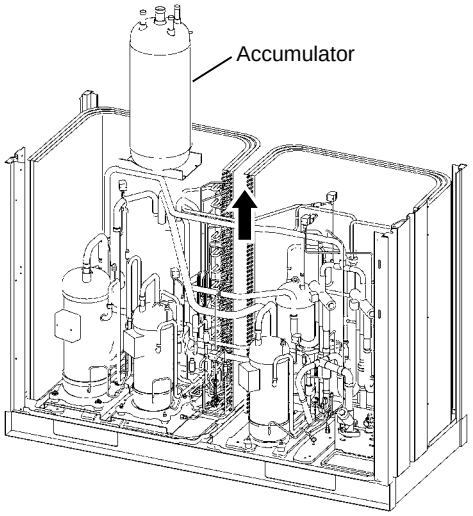

RAS-30FSN2 to RAS-48FSN2
(figure for RAS-48-FSN2)

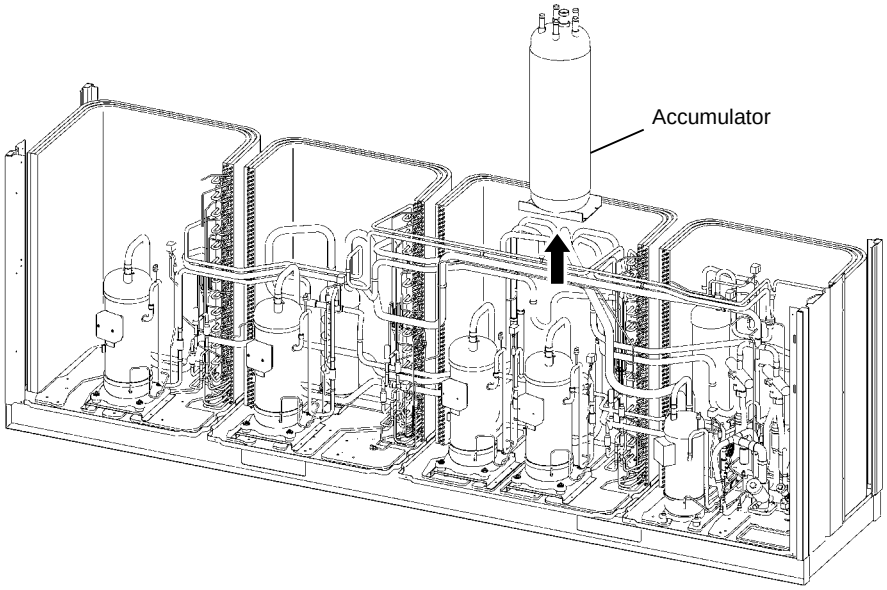

Все каталоги и инструкции здесь: https://splitsystema48.ru/instrukcii-po-ekspluatacii-kondicionerov.html

9.1.11. Removing stop valve

Before starting this work, collect the refrigerant into a cylinder from the refrigerant cycle, and turn OFF the power source of the unit.

1 Remove the front service panel according to the item “Removing Front Service Panel”.

2 When removing the gas side stop valve, cover the stop valve with wet cloth for cooling while brazing is removed.
When removing the liquid side stop valve, remove the brazing at the stop valve and the brazing at the piping connected to the plate type heat exchanger as shown in the figure.

3 Remove the screws fixing the plate as shown in the figure and pull out the stop valve with the plate together. (If the stop valve is mounted only at the liquid side, the stop valve can be pulled out without removing the plate.)

4 Reassemble the stop valve in the reverse procedure for removing.

RAS-8FSN2 to RAS-12FSN2

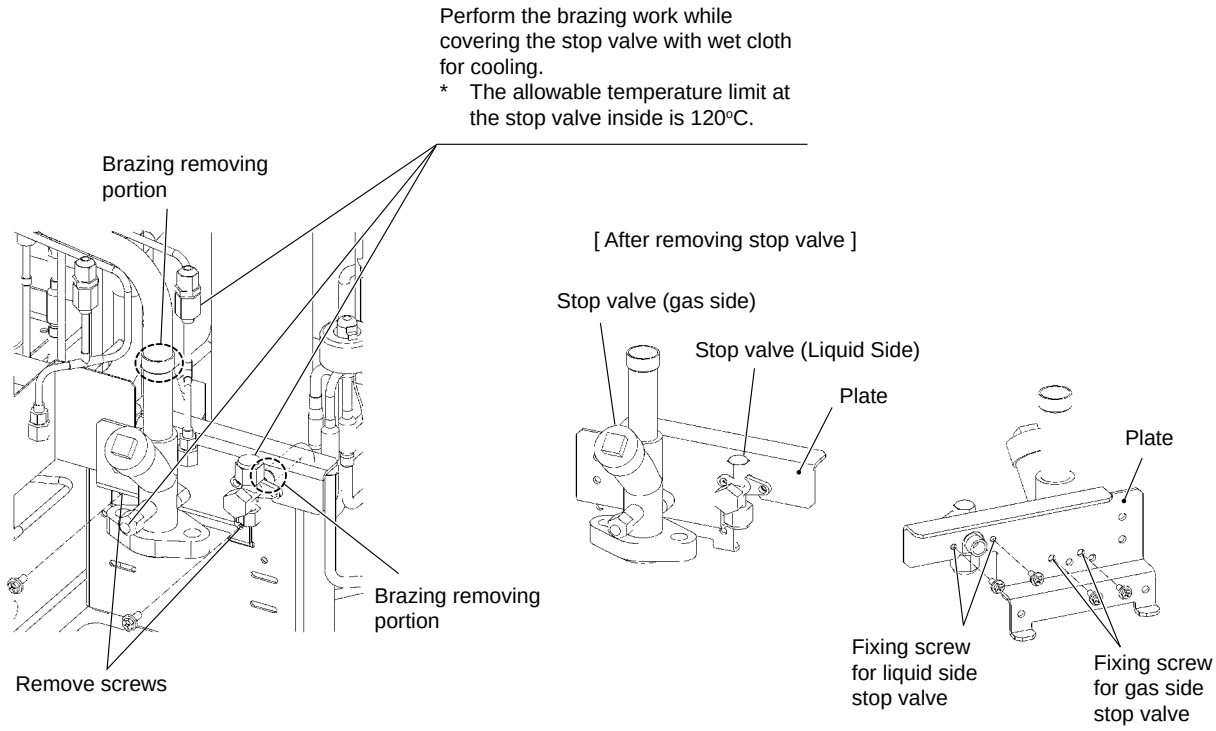

Все каталоги и инструкции здесь: https://splitsystema48.ru/instrukcii-po-ekspluatacii-kondicionerov.html

RAS-14FSN2 to RAS-24FSN2

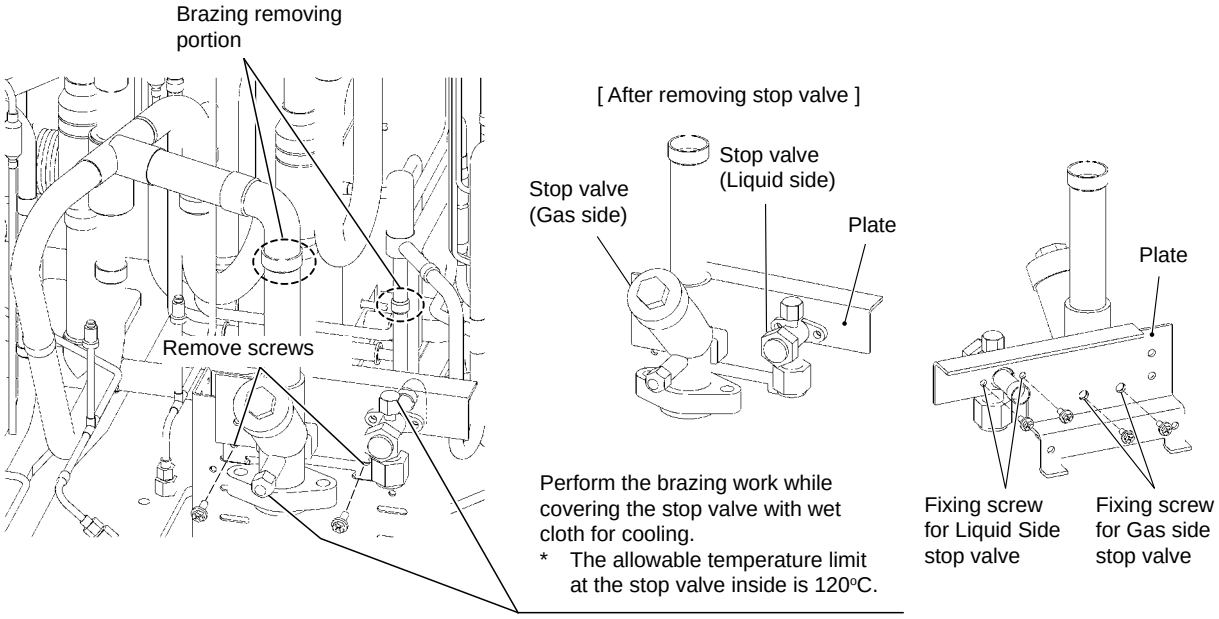

RAS-26FSN2 to RAS-48FSN2

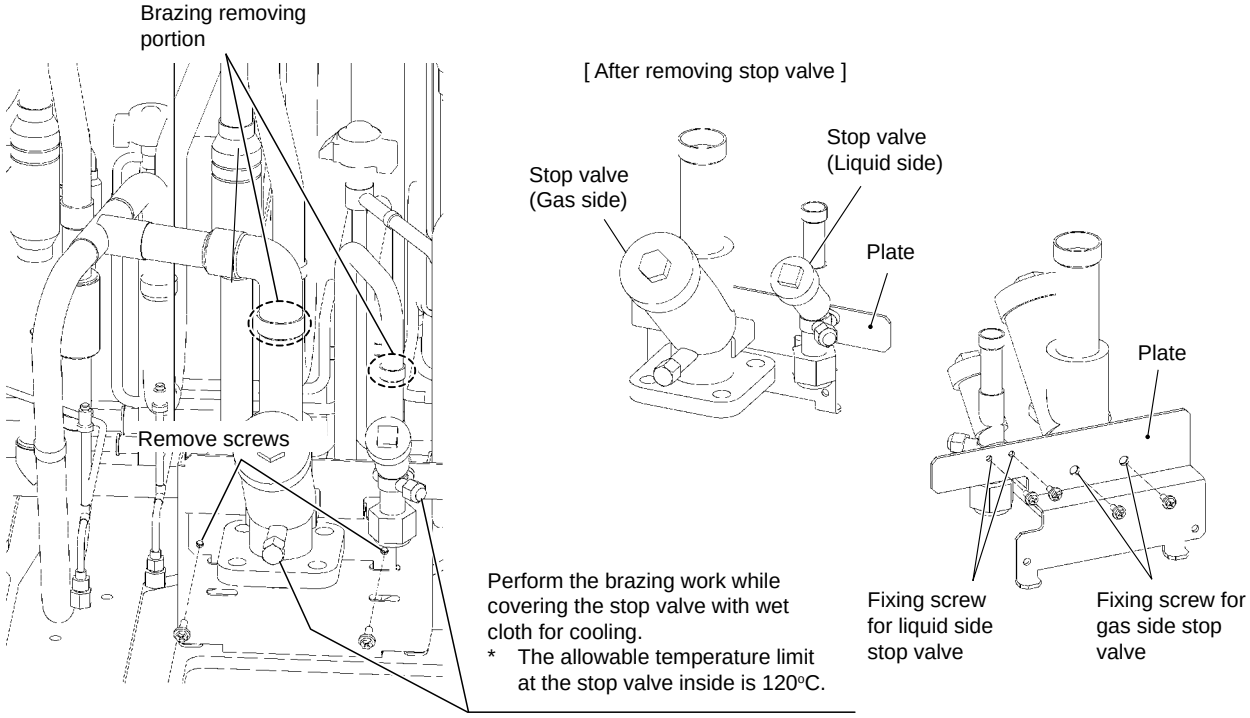

Все каталоги и инструкции здесь: https://splitsystema48.ru/instrukcii-po-ekspluatacii-kondicionerov.html

9.1.12. Removing expansion valve coil

1 Remove the front service panel according to the item “Removing Front Service Panel”.

2 Turn the expansion valve coil in counterclockwise direction as shown in the figure.
Remove the expansion valve coil bracket from the expansion valve slot. Then, pull the coil upward.

– Pay attention to the thermistor wiring when removing the expansion valve coil.

NOTE:
Make sure to remove the coil bracket from the coil before pulling it out. If not, your hand may be hit against the piping as a reaction. Follow the above procedure carefully to avoid any injuries.

3 For replacing the expansion valve coil, press the coil into the expansion valve slot with turning the coil. If an excessive force is applied to the coil, the coil bracket may be deformed. As a result, the coil cannot be fixed at the correct position as shown in the figure.

– Any slots on the expansion valve inner surface is acceptable to fix.

NOTE:
The expansion valve coil should be fixed with the force of 60N or less. After fixing, check the expansion valve coil position.

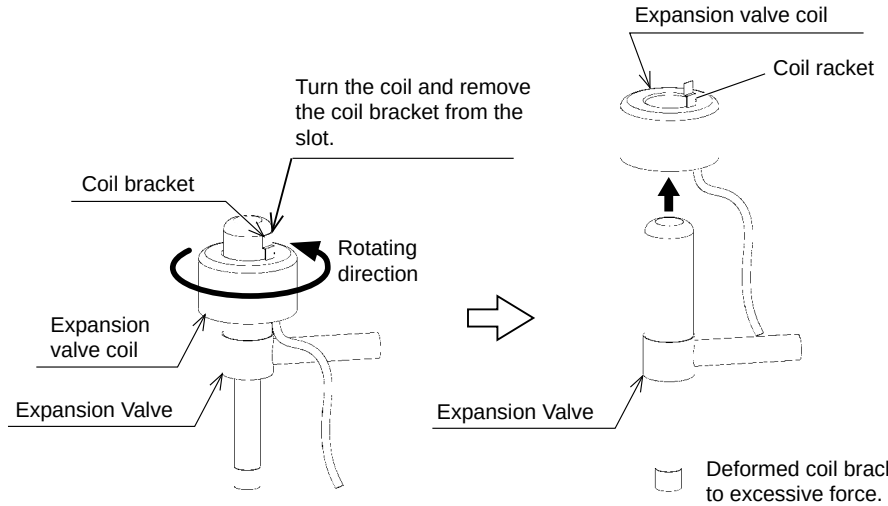

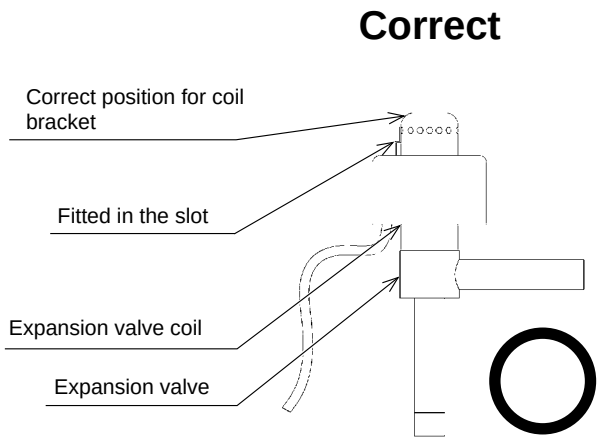

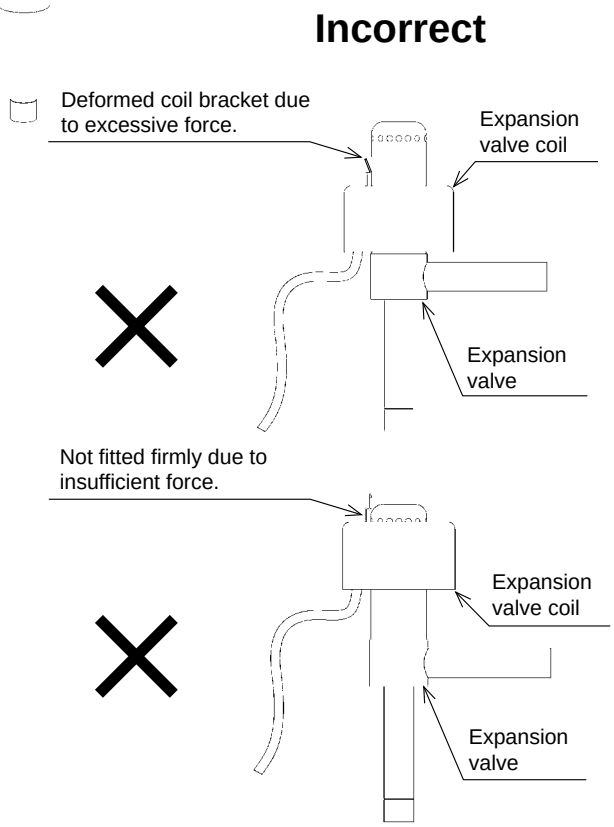

Все каталоги и инструкции здесь: https://splitsystema48.ru/instrukcii-po-ekspluatacii-kondicionerov.html

RAS-8FSN2 to RAS-12FSN2

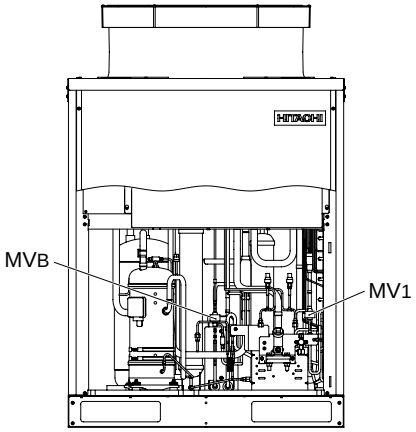

RAS-14FSN2 to RAS-24FSN2
(figure for RAS-24-FSN2)

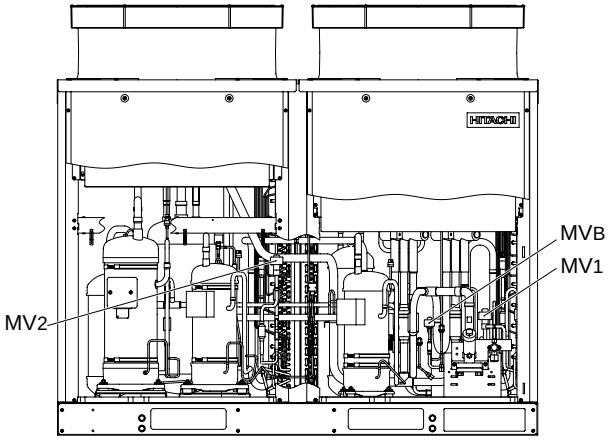

RAS-26FSN2 to RAS-42FSN2
(figure for RAS-42-FSN2)

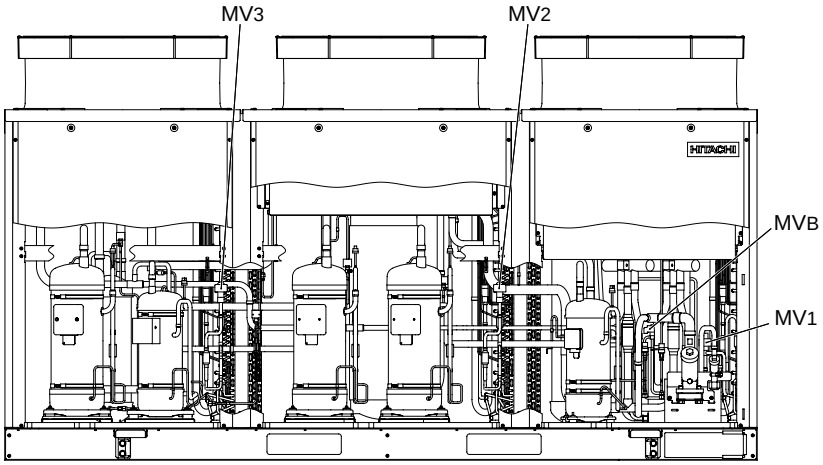

RAS-44FSN2 to RAS-48FSN2
(figure for RAS-48-FSN2)

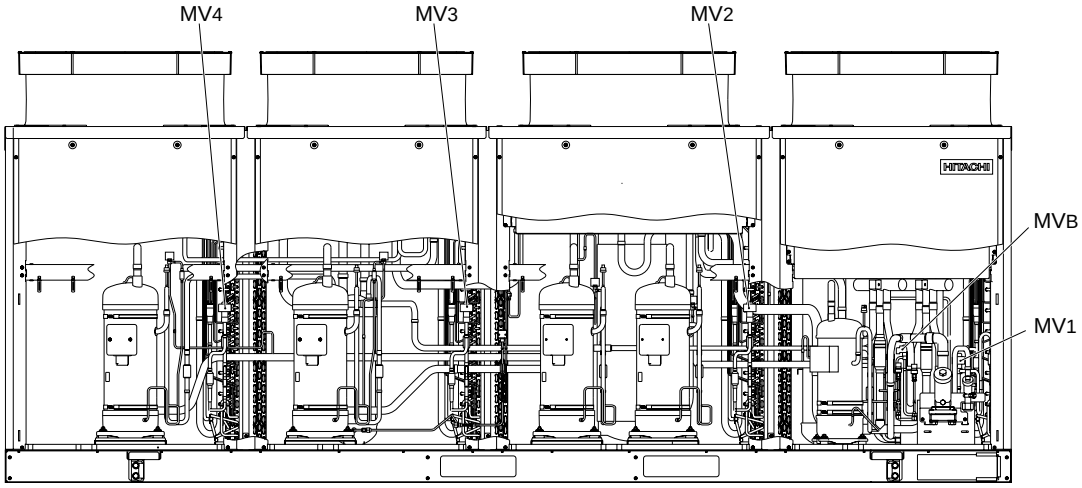

Expansion valve position

Все каталоги и инструкции здесь: https://splitsystema48.ru/instrukcii-po-ekspluatacii-kondicionerov.html

9.1.13. Removing thermistor forliquid pipe

1 Remove the front service panel according to the item “Removing Front Service Panel”.

2 Remove each two (2) screws fixing the electrical control box cover, and remove the electrical control box cover.

3 TE Thermistor:
Remove CORK TAPE and pull out the thermistor with fixing plate from the pipe. Remove the thermistor for the liquid pipe from the fixing plate.

Tchg Thermistor and Tsc Thermistor:
Remove CORK TAPE and pull out the thermistor holder from the pipe. Remove the thermistor for liquid pipe.

NOTE:
When removing the thermistor for the liquid pipe, pay attention not to be caught hands or thermistor on the valve stay fixing the stop valve.

4 Reassemble the thermistor in the reverse procedure for removing.

NOTE:
When reassembling, fix the thermistor with the vinyl pipe end downward to avoid entering water into the pipe.

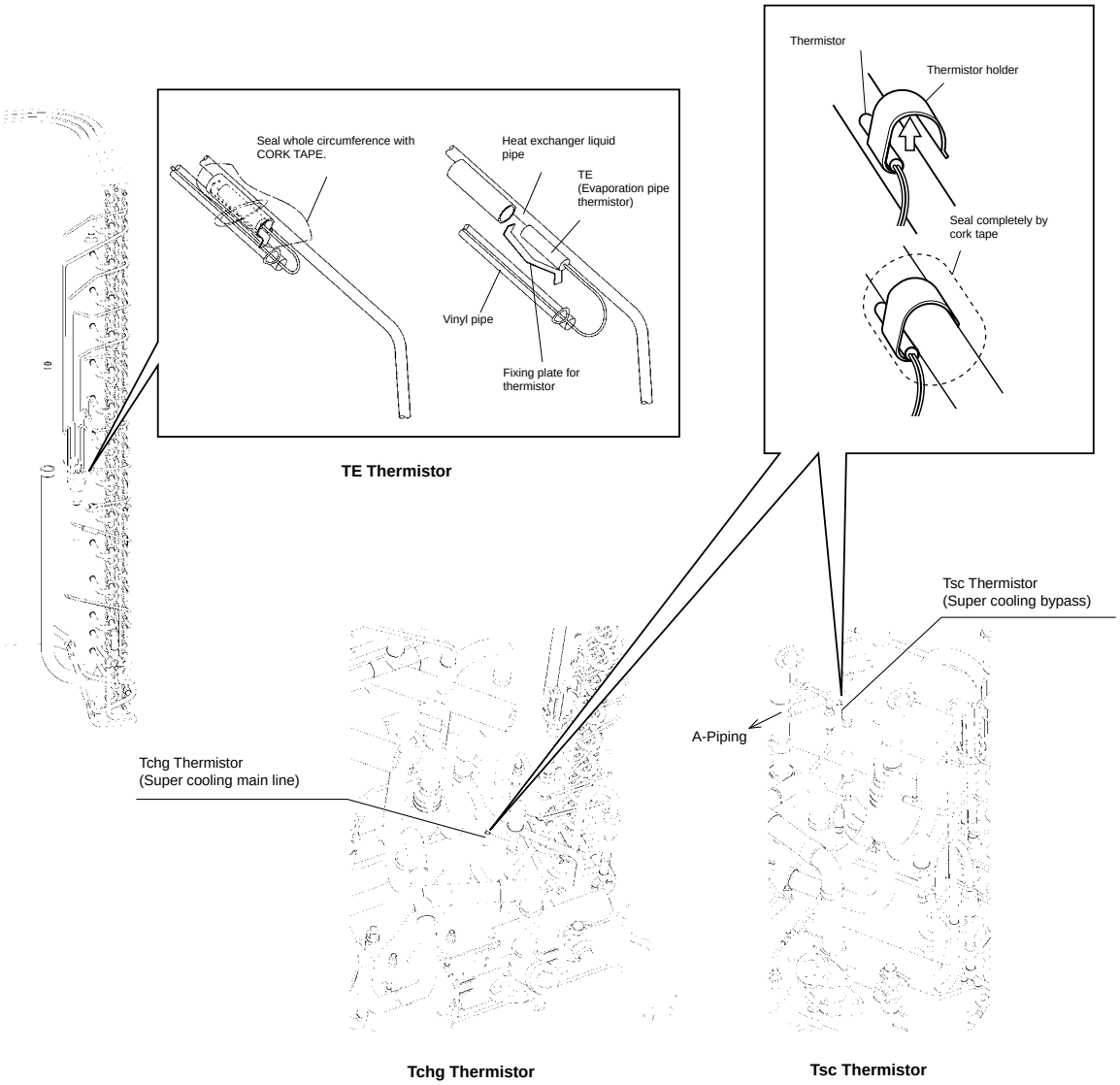

Thermistor position for liquid pipe (example: RAS-24FSN2)

Все каталоги и инструкции здесь: https://splitsystema48.ru/instrukcii-po-ekspluatacii-kondicionerov.html

RAS-8FSN2 to RAS-12FSN2

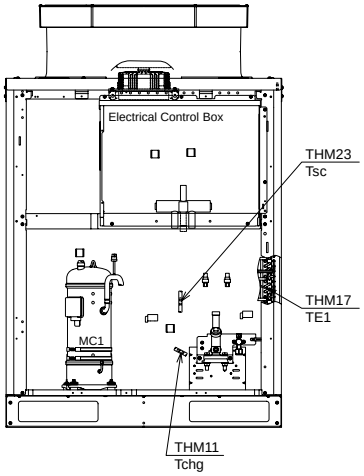

RAS-14FSN2 to RAS-24FSN2

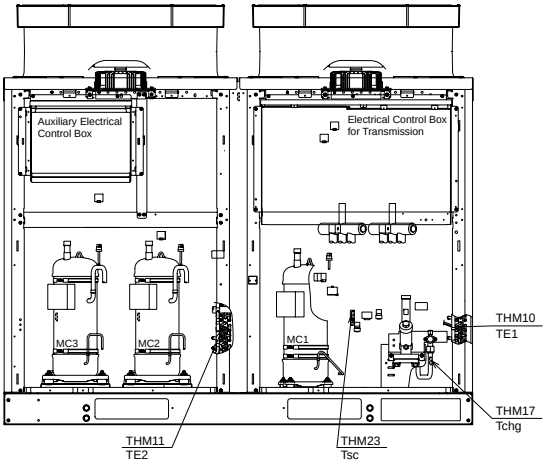

RAS-26FSN2 to RAS-42FSN2

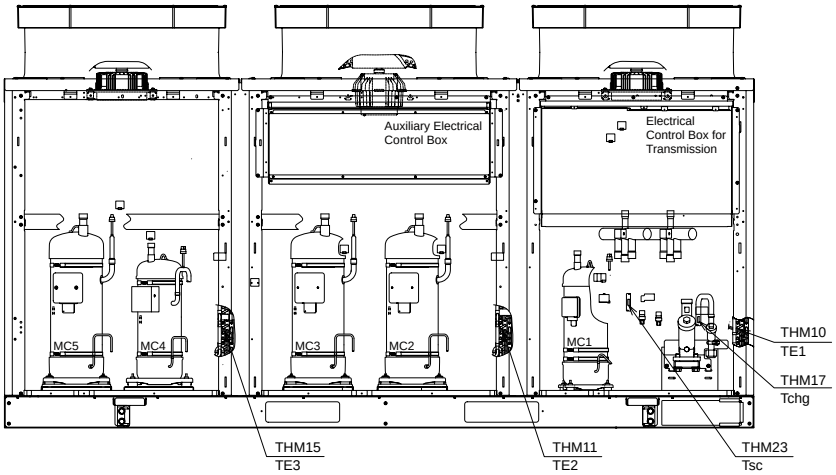

RAS-44FSN2 to RAS-48FSN2

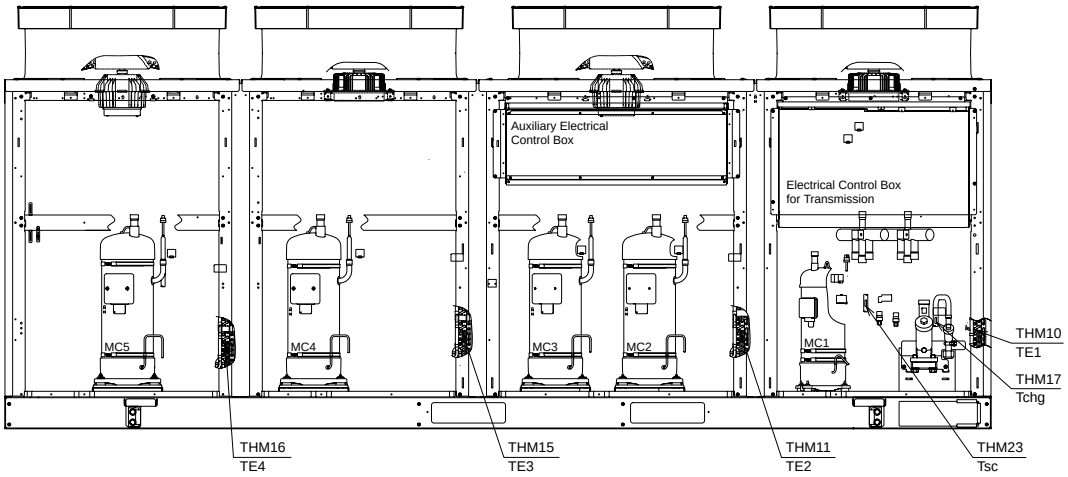

Thermistor for liquid pipe position

Все каталоги и инструкции здесь: https://splitsystema48.ru/instrukcii-po-ekspluatacii-kondicionerov.html

9.1.14. Removing thermistor for ambient temperature

1 Remove the front service panel according to the item "Removing Front Service Panel".

2 Remove each four (4) screws fixing the electrical control box cover, and remove the electrical control box cover.

3 Remove screws fixing the upper cover as shown in the figure, and remove the upper cover:
RAS-8FSN2 to 12FSN2: eight (8) screws,
RAS-14FSN2 to 24FSN2: sixteen (16) screws,
RAS-26FSN2 to 42FSN2: twenty-four (24) screws,
RAS-44FSN2 to 48FSN2: thirty-two (32) screws.

NOTE:
When removing the upper cover, pay attention not to damage the shroud.

4 Remove the air intake grille according to the item "Removing Air Intake Grille".

5 Remove the fixing clamps for wiring.

6 Reassemble the thermistor for ambient temperature in the reverse procedure for removing.

NOTE:
If the upper cover is not fixed properly, it may cause upper cover vibration during the outdoor fan operation. Check the upper cover carefully after reassembling.

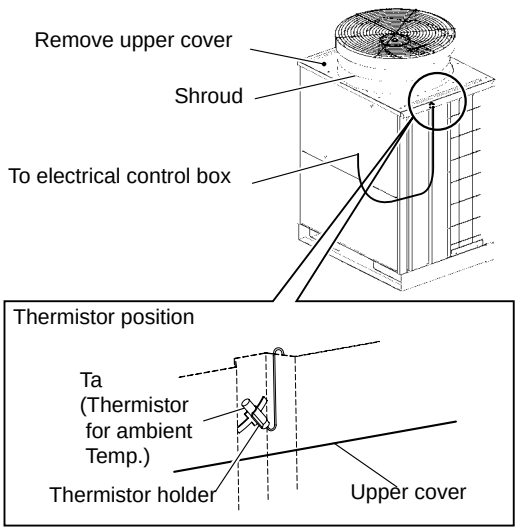

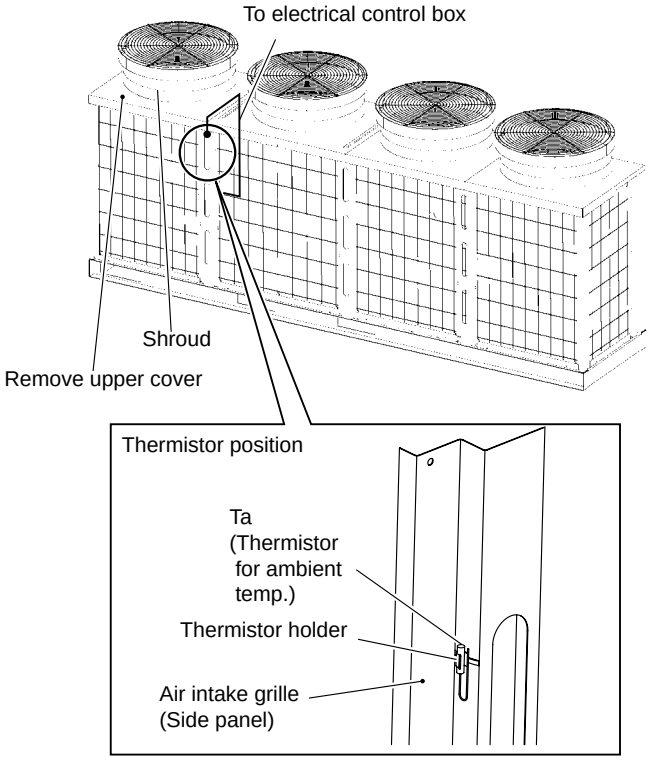

Removing screws for upper cover (Example: RAS-48-FSN2)

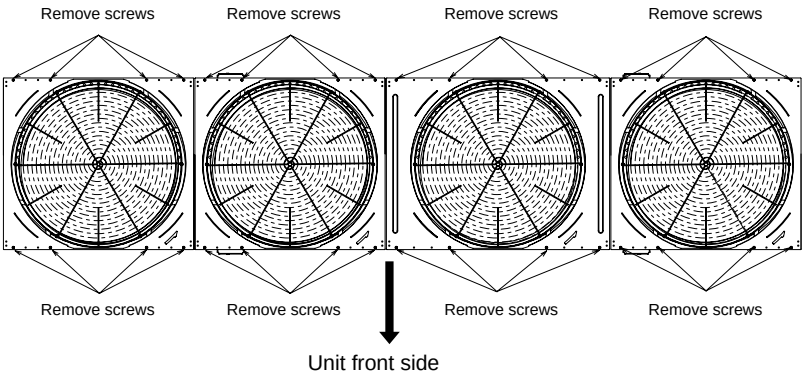

Все каталоги и инструкции здесь: https://splitsystema48.ru/instrukcii-po-ekspluatacii-kondicionerov.html

9.1.15.Removing electrical control box

1 Remove the front service panel according to the item “Removing Front Service Panel”.

2 Remove four (4) screws of each electrical control box cover and remove the electrical control box cover.

NOTES:
- *When removing the screws fixing the electrical control box cover, hold the cover not to fall.*
- *Pay attention not to be injured with the service panel edge when removing.*

3 Loosen clamps for the electrical wiring at the electrical control box bottom side, and release them.

NOTE:
When reassembling, fix the wiring at the original position without contacting the plate.

4 Disconnect all of the connectors connected to the PCB1

5 Remove the screws fixing the compressor cable, the power source cable and the transmission cables, and disconnect them from the electrical control box.

6 Disconnect the connectors for fan motors, solenoid valve coils, reversing valve coils, thermistors, expansion valve coils, wiring for PSH and connectors.

7 Lift up the electrical control box to unhook from the side cover. Draw the electrical control box forward.

NOTES:
- *Do not pull the cables from the electrical control box forcefully.*
- *Protect the cables from being caught on the plate edge such as stays.*

RAS-8FSN2 to RAS-12FSN2

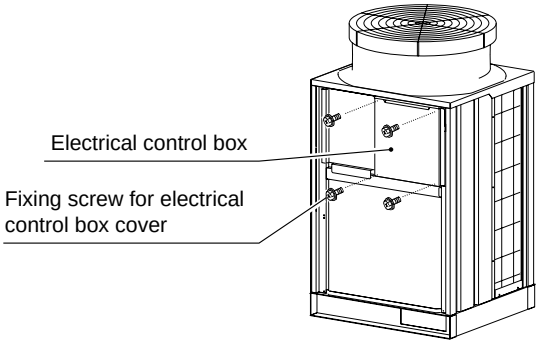

RAS-14FSN2 to RAS-24FSN2

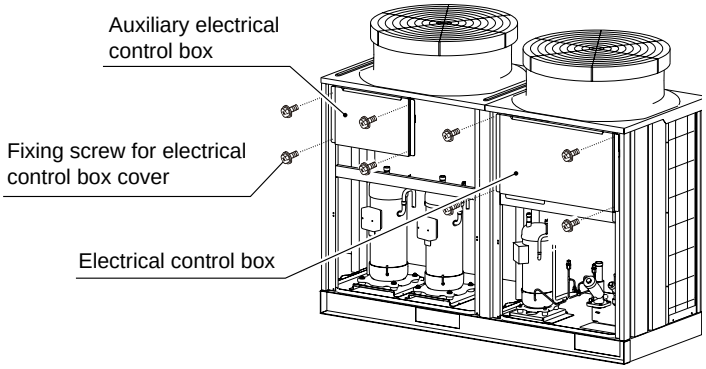

RAS-26FSN2 to RAS-48FSN2

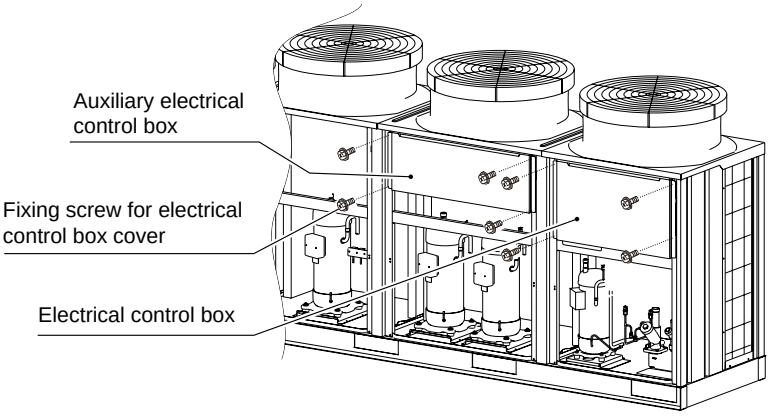

Electrical control box position

Все каталоги и инструкции здесь: https://splitsystema48.ru/instrukcii-po-ekspluatacii-kondicionerov.html

8 For attaching the electrical box, perform the reverse procedures for removing.

NOTES:

1 *Check to ensure that waterproof vinyl pipe edge and connectors are fixed firmly with cord clamp in the electrical box when wiring as shown in the figure below.*

2 *Fix the wiring from each electrical part to the electrical box with plastic band to avoid direct contact with compressor, piping and plate edge.*

3 *Fix the wiring neatly to avoid the damage by pressing with the electrical box cover.*

4 *Fix the fan motor wiring with cord clamp as shown in the figure.*

Details of fixing the vinyl pipe edge

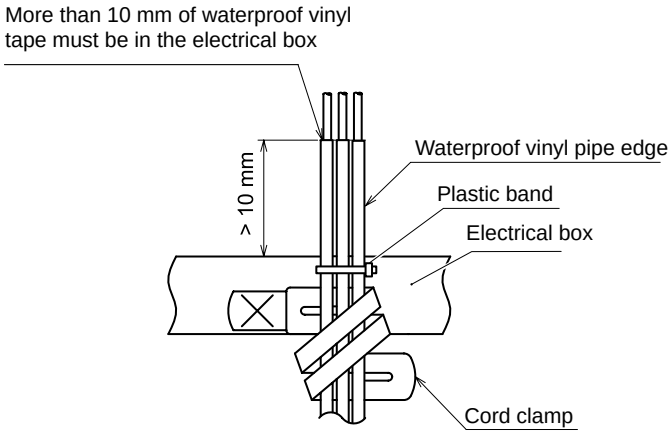

Все каталоги и инструкции здесь: https://splitsystema48.ru/instrukcii-po-ekspluatacii-kondicionerov.html

9.1.16.Removing other electrical components

NOTES:

1. Apply conductive silicon grease (Service Parts No.: P22760) slightly over the contact surface with the fin when replacing the components of the heat radiation fin such as transistor module (IPM), diode module (DM) and fan controller (FANM1, 2).
2. Match the terminal Nos. with the mark band Nos. when reassembling. If incorrectly connected, malfunction may occur or the electrical components may be damaged.
3. The U and V-Phase of the power source cables (U, V and W-phase) for inverter compressor (MC1) should be past through the current sensor (CTU and CTV) of the inverter module (PCB2) completely.
   Connect U-Phase of the power source cable with U-Phase side (CTU), and V-Phase with V-Phase side (CTV) of the current sensor. If not, it may cause of equipment malfunction or failure.
4. When fixing PCBs or sheet metal for PCB, protect the electric wiring from being caught on the sheet metal or the electrical components.
5. Make sure to use screws, bushes and collars when fixing PCBs for inverter compressor.
   If not, it may cause of equipment malfunction.
6. When replacing the PCB for transmission, set the dip switches same as before PCB replacing. Incorrect setting will cause malfunction. Refer to the instruction manual attached with servicing PCB.
7. Do not apply excessive force to the electrical components on PCB or PCB itself. It may lead to PCB failure.
8. When replacing the fan controller, set the dip switches same as before replacing the fan controller.
   Incorrect setting will cause malfunction.n Removing PCB1 and electrical components for electrical box

Removing PCB1

1 Remove all the connectors for wiring at PCB1.

2 Hold the middle part of the holder fixing the PCB1 (Part A in the figure, 10 portions) with a long-nose pliers and pull it out to remove.

Opening PCB1 fixing plate

1 Remove all the wirings connected with electrical components.

2 Remove screws at Part B in the figure. Electrical components are available to check or replace from the opening.

RAS-8FSN2 to RAS-12FSN2 (220V/60Hz) Only: four (4) screws,
RAS-8FSN2 to RAS-48FSN2: two (2) screws

3 If the fixing plate for PCB1 is removed, all the connectors connected with PCB1 should be removed.

Removing electrical components

1 Remove all the wirings connected with electrical components.

2 Remove the screws fixing electrical components.

NOTES:

1. *The open angle for the PCBs fixing plate should be within 120 degree. If try to open wider than 120 degree, the fixing plate will not open due to insufficient electrical wiring length.*
2. *Do not touch the electrical components on PCBs. Do not bend or apply excessive force to PCB. It will cause PCB failure.*

Removing electrical components for auxiliary electrical control box
(RAS-14FSN2 to RAS-48FSN2 Only)

1 Remove all the wirings connected with electrical components.

2 Remove the screws fixing electrical components.

NOTES:

1. *Match the terminal Nos. with the mark band Nos. when reassembling. If incorrectly connected, malfunction may occur or the electrical components may be damaged.*
2. *Protect the cables from being caught on the plate edge or electrical component when closing the PCB fixing plate for reassembling.*
3. *The capacitor is charged with electricity even if the power source is turned off.*
   DO NOT contact with the terminals to avoid electrical shock. (*)

Все каталоги и инструкции здесь: https://splitsystema48.ru/instrukcii-po-ekspluatacii-kondicionerov.html

RAS-8FSN2 to RAS-12FSN2
(380-415V/50Hz)

Front side (Main)

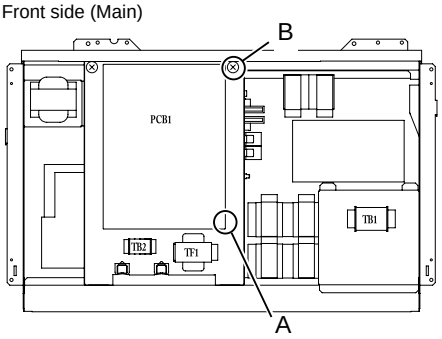

The interior of the electrical control box (Main)

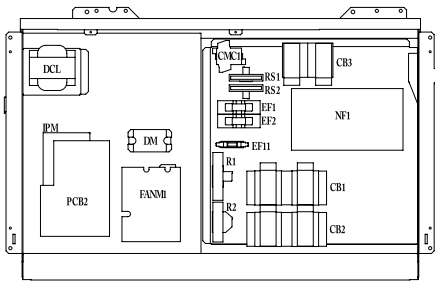

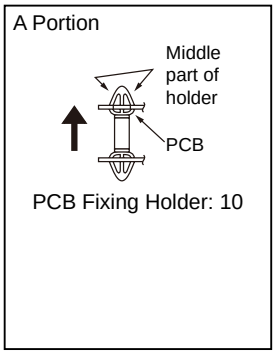

RAS-8FSN2 to RAS-12FSN2
(220V/60Hz)

Front side (Main)

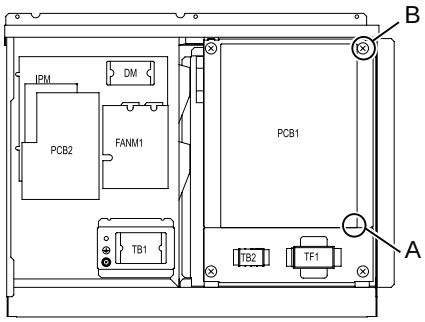

The interior of the electrical control box (Main)

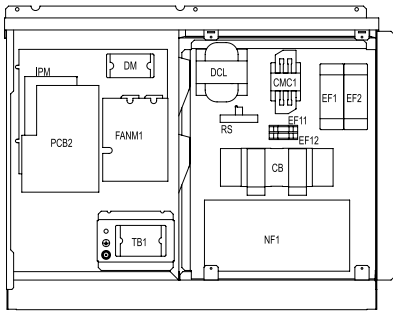

PCB1:	Control PCB in outdoor unit	PCB2:	Inverter PCB
IPM:	Transistor module	FANM1:	Fan module
DM:	Diode module	DCL:	Reactor
TF1:	Transformer	NF1:	Noise filter
R1, 2, RS, 1, 2:	Resistor	CB, 1, 2, 3:	Capacitor (*)
TB1:	Terminal board for power source	TB2:	Terminal board for transmission
CMC1:	Magnetic contactor for inverter compressor	EF1, 2:	Fuse for Iinverter compressor
EF11, 12:	Fuse for fan module		

Все каталоги и инструкции здесь: https://splitsystema48.ru/instrukcii-po-ekspluatacii-kondicionerov.html

RAS-14FSN2 to RAS-24FSN2
(380-415V/50Hz)

Front side (Main)

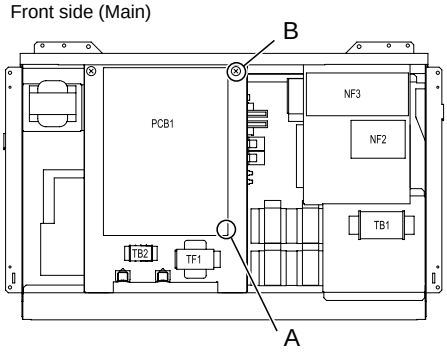

The interior of the electrical control box (Main)

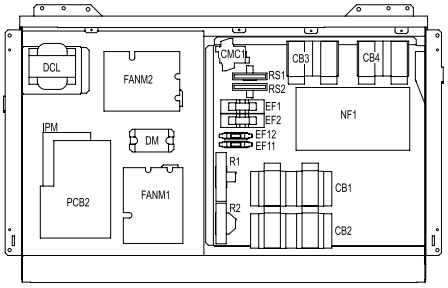

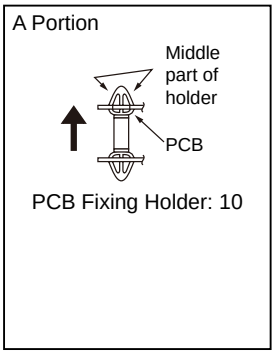

Front side (Auxiliary)

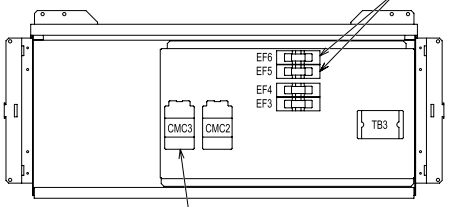

RAS-14FSN2 to RAS-24FSN2 (220V/60Hz)

Front side (Main)

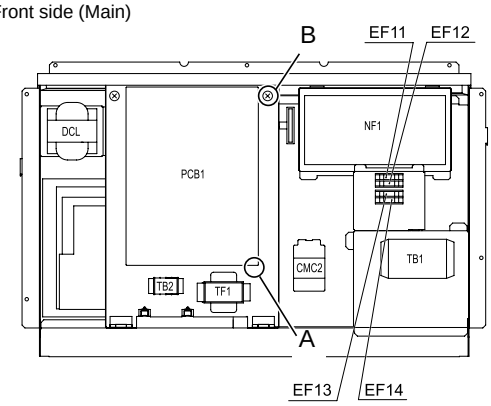

The interior of the electrical control box (Main)

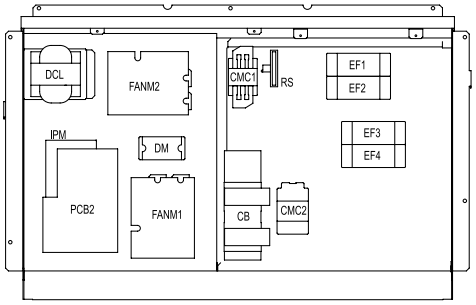

Front side (Auxiliary)

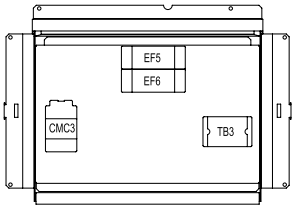

(RAS-18, 20FSN2)

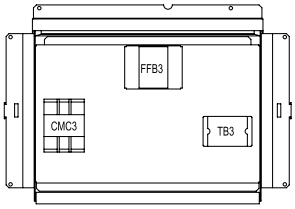

(RAS-22, 24FSN2)

PCB1:	Control PCB in Outdoor Unit	PCB2:	Inverter PCB
IPM:	Transistor Module	FANM1, 2:	Fan Module
DM:	Diode Module	DCL:	Reactor
TF1:	Transformer	NF1, 2, 3:	Noise Filter
R1, 2, RS, 1, 2:	Resistor	CB, 1, 2, 3, 4:	Capacitor (T)
TB1, 3:	Terminal Board for Power Source	TB2:	Terminal Board for Transmission
CMC1:	Magnetic Contactor for Inverter Compressor	CMC2, 3:	Magnetic Contactor for Constant Speed Compressor
EF1, 2:	Fuse for Inverter Compressor	EF3, 4, 5, 6:	Fuse for Constant Speed Compressor
EF11, 12, 13, 14:	Fuse for Fan Module	FFB3:	Circuit Breaker for Constant Speed Compressor

Все каталоги и инструкции здесь: https://splitsystema48.ru/instrukcii-po-ekspluatacii-kondicionerov.html

RAS-26FSN2 to RAS-42FSN2
(380-415V/50Hz, 380V/60Hz)

Front side (Main)

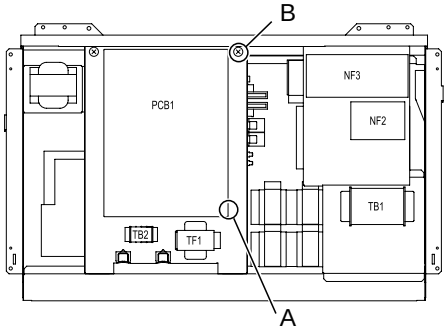

The interior of the electrical control box (Main)

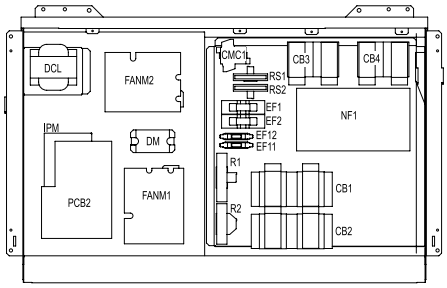

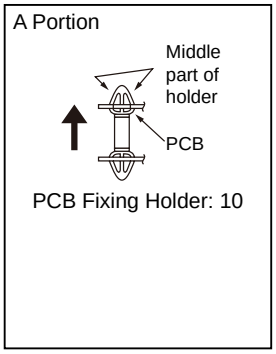

Front side (Auxiliary)

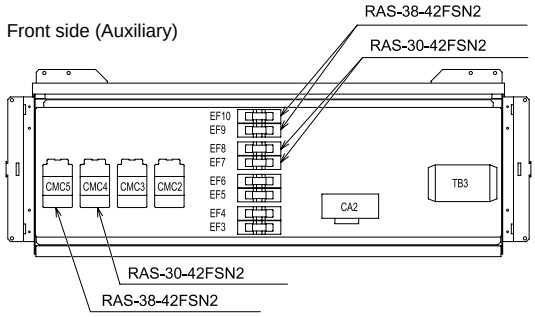

RAS-26FSN2 to RAS-42FSN2 (220V/60Hz)

Front side (Main)

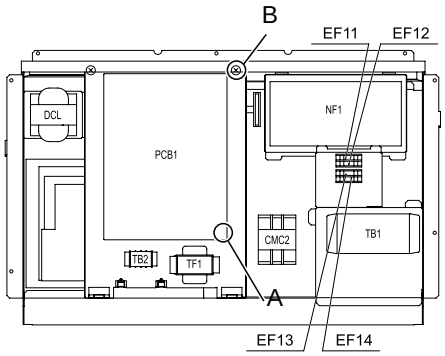

The interior of the electrical control box (Main)

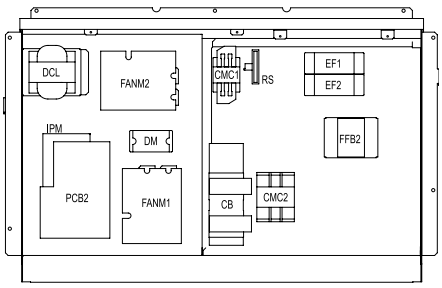

Front side (Auxiliary)

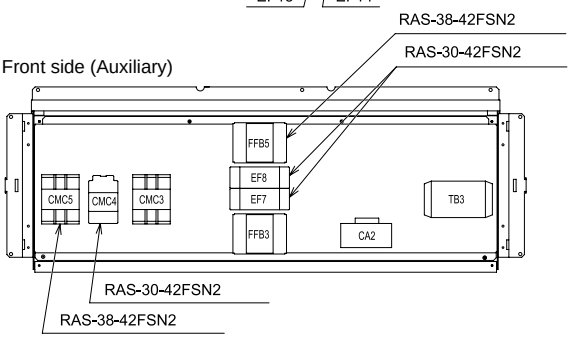

PCB1:	Control PCB in outdoor unit	PCB2:	Inverter PCB
IPM:	Transistor module	FANM1, 2:	Fan module
DM:	Diode module	DCL:	Reactor
TF1:	Transformer	NF1, 2, 3:	Noise Filter
R1, 2, RS, 1, 2:	Resistor	CA2:	Capacitor for AC fan motor (T)
CB, 1, 2, 3, 4:	Capacitor (T)	TB1, 3:	Terminal Board for Power source
TB2:	Terminal board for transmission	CMC1:	Magnetic contactor for inverter compressor
CMC2, 3, 4, 5:	Magnetic contactor for constant speed Compressor	EF1, 2:	Fuse for Inverter compressor
EF3, 4, 5, 6, 7, 8, 9, 10:	Fuse for constant speed compressor	EF11, 12, 13, 14:	Fuse for Fan Module
FFB2, 3, 5:	Circuit breaker for constant speed compressor		

Все каталоги и инструкции здесь: https://splitsystema48.ru/instrukcii-po-ekspluatacii-kondicionerov.html

RAS-44FSN2 to RAS-48FSN2
(380-415V/50Hz, 380V/60Hz)

Front side (Main)

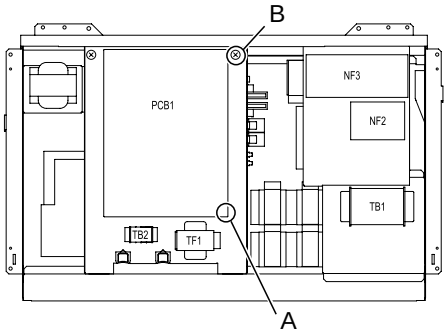

The interior of the electrical control box (Main)

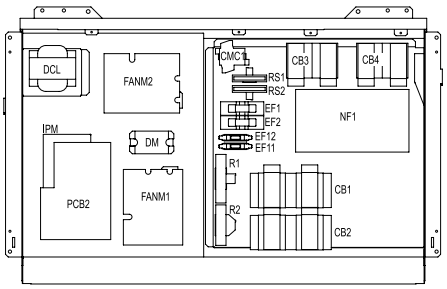

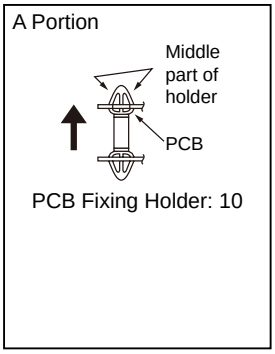

Front side (Auxiliary)

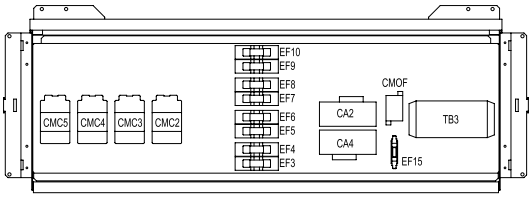

RAS-44FSN2 to RAS-48FSN2 (220V/60Hz)

Front side (Main)

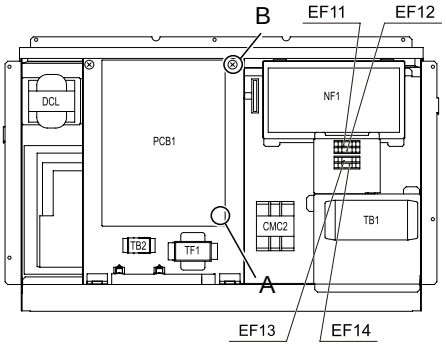

The interior of the electrical control box (Main)

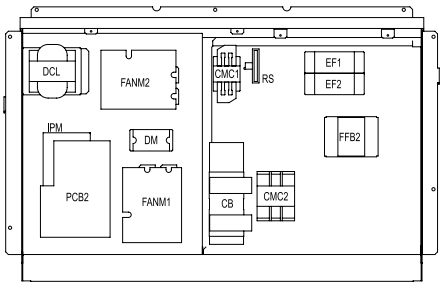

Front side (Auxiliary)

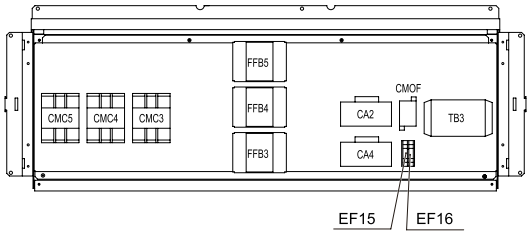

PCB1:	Control PCB in outdoor unit	PCB2:	Inverter PCB
IPM:	Transistor module	FANM1, 2:	Fan module
DM:	Diode module	DCL:	Reactor
TF1:	Transformer	NF1, 2, 3:	Noise filter
R1, 2, RS, 1, 2:	Resistor	CA2, 4:	Capacitor for AC fan motor (*)
CB, 1, 2, 3, 4:	Capacitor (*)	TB1, 3:	Terminal board for Power source
TB2:	Terminal board for transmission	CMC1:	Magnetic contactor for Inverter compressor
CMC2, 3, 4, 5:	Magnetic contactor for constant speed compressor	CMOF:	Magnetic contactor for AC fan motor
EF1, 2:	Fuse for inverter compressor	EF3, 4, 5, 6, 7, 8, 9, 10:	Fuse for constant speed compressor
EF11, 12, 13, 14:	Fuse for fan module	EF15, 16:	Fuse for AC fan motor
FFB2, 3, 4, 5:	Circuit breaker for constant speed compressor		

Все каталоги и инструкции здесь: https://splitsystema48.ru/instrukcii-po-ekspluatacii-kondicionerov.html

■ **Removing PCB2 for inverter**

After removing three (3) M3 screws, remove the bushes and collars from PCB2. When reassembling, the bushes and collars should be fixed correctly.

NOTES:

1 *Do not touch any electrical components during LED201 (red) of PCB2 is ON. If touched, it may lead to electrical shock.*

2 *Identify the terminal Nos. with the mark band Nos. when reassembling. If incorrectly connected, malfunction or damage will occur.*

3 *Check to ensure that the electrical wires will not be caught between the mounting electrical components and the mounting plates when the PCB2 is remounted.*

WARNING:

Do not touch any electrical part while LED 201 (Red) on PCB2 in ON. If touched, electrical shock will occur.

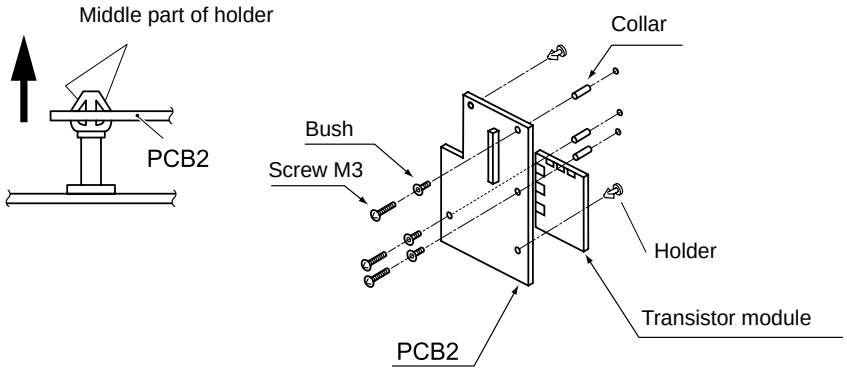

Все каталоги и инструкции здесь: https://splitsystema48.ru/instrukcii-po-ekspluatacii-kondicionerov.html

■ Removing diode module and transistor module

Before this work, remove the service panel according to the item “Removing Front Service Panel”.

Check to ensure that LED201 (Red) of the PCB2 is OFF.

1 Disconnect all the wirings connected to the diode module as shown below.
   a Disconnect the wirings of terminal +, - , U, V, W on the diode module.
   b Remove two (2) fixing screws on the diode module.
   c Remove the diode module from the electrical box.
2 Disconnect all the wirings connected to the transistor module as shown below.
   a Disconnect the wirings of connector CN2, CN206 and CN207.
   b Disconnect the wirings of P, N, U, V, W on the transistor module.
   c Remove the three (3) screws for the PCB2 and then remove the PCB2 from the transistor module.
   d Remove four (4) fixing screws on the transistor module.
   e Remove the transistor module from the electrical box.

NOTES:

1 *When mounting PCB2, marks on the PCB2 look upside down but this is the correct position.*
2 *Identify the terminal Nos. with the mark band Nos. when reassembling. If incorrectly connected, malfunction or damage will occur.*
3 *Check to ensure that the electrical wires will not be caught between the mounting electrical components and the mounting plates when the PCB2 is remounted.*
4 *Apply silicon grease evenly on the whole rear side of the diode module and the transistor module when mounting. Use Silicon grease provided as accessory (service parts No.: P22760).*

Diode Module

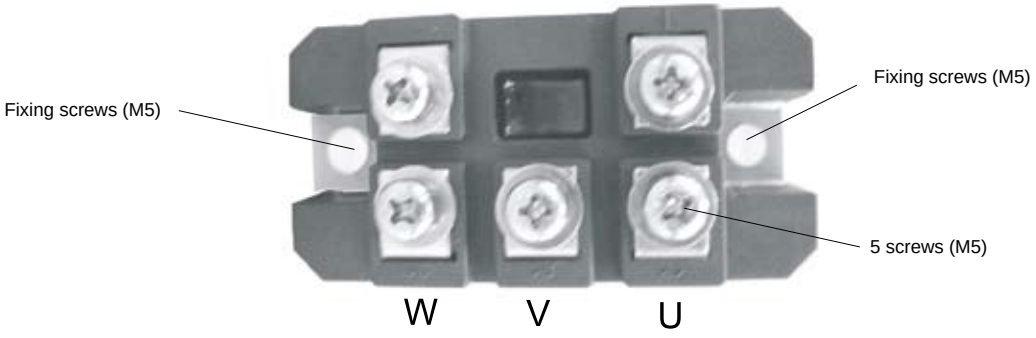

PCB2 and Transistor Module

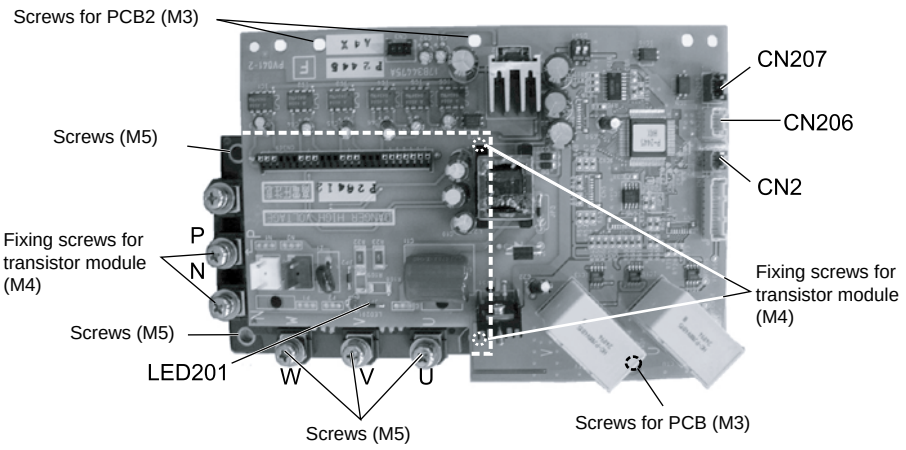

Все каталоги и инструкции здесь: https://splitsystema48.ru/instrukcii-po-ekspluatacii-kondicionerov.html

■ Removing fan module

Before this work, remove the service panel according to the item “Removing Front Service Panel”.
Check to ensure that LED201 (Red) of the PCB3 is off.

Disconnect all the wirings connected to the fan module as shown below.

1) Disconnect the wirings of the connector of CN201, CN202 and CN203 from the fan module.
2) Disconnect wirings of R, S, T, U, V, W on the fan module.
3) Remove five (5) screws fixing the fan module so that the fan module can be removed.

NOTE:

1. *Do not apply great force when removing the fan module, or the brazing will be fallen apart and a malfunction of the fan module may occur.*
2. *Identify the terminal Nos. with the mark band Nos. when reassembling. If incorrectly connected, malfunction or damage will occur.*
3. *Check to ensure that the electrical wires will not be caught between the mounting electrical components and the mounting plates when the PCB3 is remounted.*
4. *Apply silicon grease evenly on the whole rear side of the fan module when mounting. Silicon grease is available as a field-supplied accessory.*

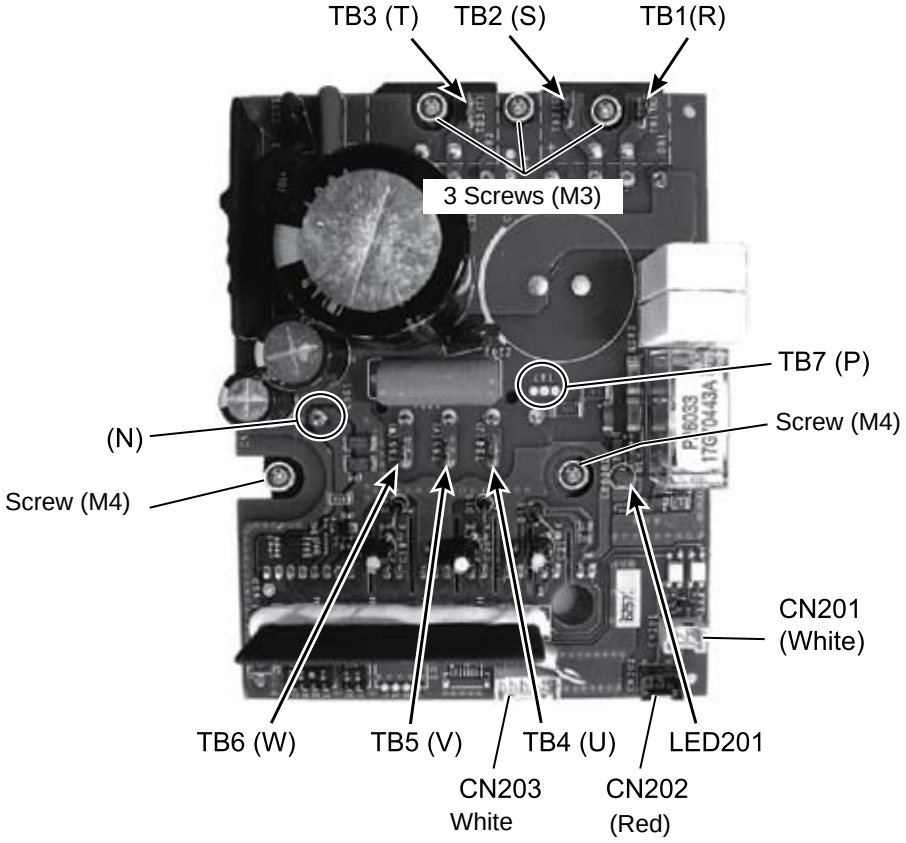

Все каталоги и инструкции здесь: https://splitsystema48.ru/instrukcii-po-ekspluatacii-kondicionerov.html

Все каталоги и инструкции здесь: https://splitsystema48.ru/instrukcii-po-ekspluatacii-kondicionerov.html

10. Main parts

Contents

10. Main parts ____ 251
10.1. Inverter ____ 252
10.1.1. Specifications of inverter ____ 252
10.1.2. Inverter time chart ____ 254
10.1.3. Protective Function ____ 255
10.1.4. Overload Control ____ 256
10.2. Thermistor ____ 257
10.2.1. Position of thermistor ____ 257
10.2.2. Resistance value of the thermistor ____ 257
10.3. Electronic expansion valve ____ 260
10.3.1. Electronic expansion valve for the outdoor unit ____ 260
10.4. Pressure sensor ____ 261
10.5. Scroll compressor ____ 262
10.5.1. Reliable mechanism for low vibrating and low sound ____ 262
10.5.2. Principle of compression ____ 262

Все каталоги и инструкции здесь: https://splitsystema48.ru/instrukcii-po-ekspluatacii-kondicionerov.html

10.1. Inverter

10.1.1.Specifications of inverter

Aplicable model	RAS-8~48FSN2
Aplicable power source	3 Phase. 380V, 415V 50 Hz
Output voltage	380-415V
Output current	25A
Time rating	Continuous
Control method	Vector PWM Control
Range Output Frequency	20~115Hz
Accuracy of Frequency	0,01 Hz at applicable frequency range
Accuracy of output voltage	±10% at applicable frequency range

Output / Characteristics	Conditions: 1. Power Source Voltage AC380/415V 2. Non-Loading (Free Output) 3. Ammeter Type Volt-Meter (X1.1) 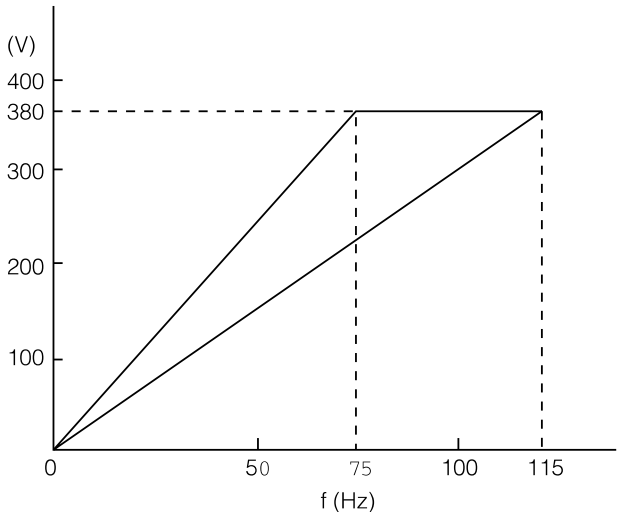 Refer to the note in next page
Soft start stop	0.125Hz/S, 0.25HzS, 0.5Hz/S, 1Hz/S, 3Hz/S (5 steps)
Protection function	
Excessive high or low voltage for Inverter	Excessive Low Voltage at a voltage is lower than 350V DC Excessive High Voltage at a voltage is higher than 750V DC
Abnormality of current sensor	Stoppage at a current of compressor smaller than 1.5A. Cause of Abnormality: Failure of Current Sensor Failure of Transistor module Failure of Compressor Disconnected Wiring

Все каталоги и инструкции здесь: https://splitsystema48.ru/instrukcii-po-ekspluatacii-kondicionerov.html

Protection Function	
Overcurrent Protection for Inverter	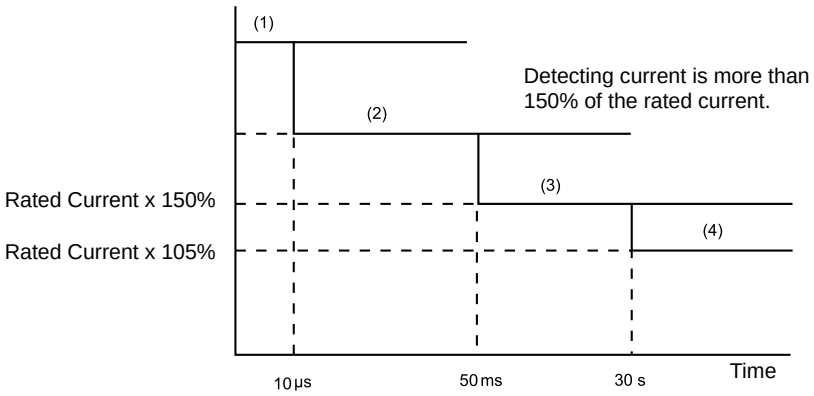 *) Internal protection Transistor module or IPM (1) Short-Circuit Trip of Arm *) (2) Instantaneous Overcurrent Trip *) (3) Instantaneous Overcurrent Trip (4) Electronic Thermal Trip Condition is maintained longer than 30 seconds or accumulated longer than 3 minutes during 10 minutes sampling time.
Protection of Transistor Module	Transistor module or IPM has four protection function for self-protection. (1) Some of the output terminals between "U" and "V", "V" and "W", "W" and "U" has a short-circuit. (2) Running current reaches the maximum rated current. (3) Abnormal temperature is measured by internal thermistor. (4) Control voltage decreases abnormally.
Overload Control	Overload control as a current greater than (Rated Current X105%). Overload control release at a current smaller than (Rated Current X 88%).
Fin Temperature Increase	The unit is stopped when the IPM temperature is higher than 100°C.
Earth Detection	The unit is stopped when the compressor is earthing.

Note
Characteristics are fluctuated by the current minimize control.

Все каталоги и инструкции здесь: https://splitsystema48.ru/instrukcii-po-ekspluatacii-kondicionerov.html

10.1.2.Inverter time chart

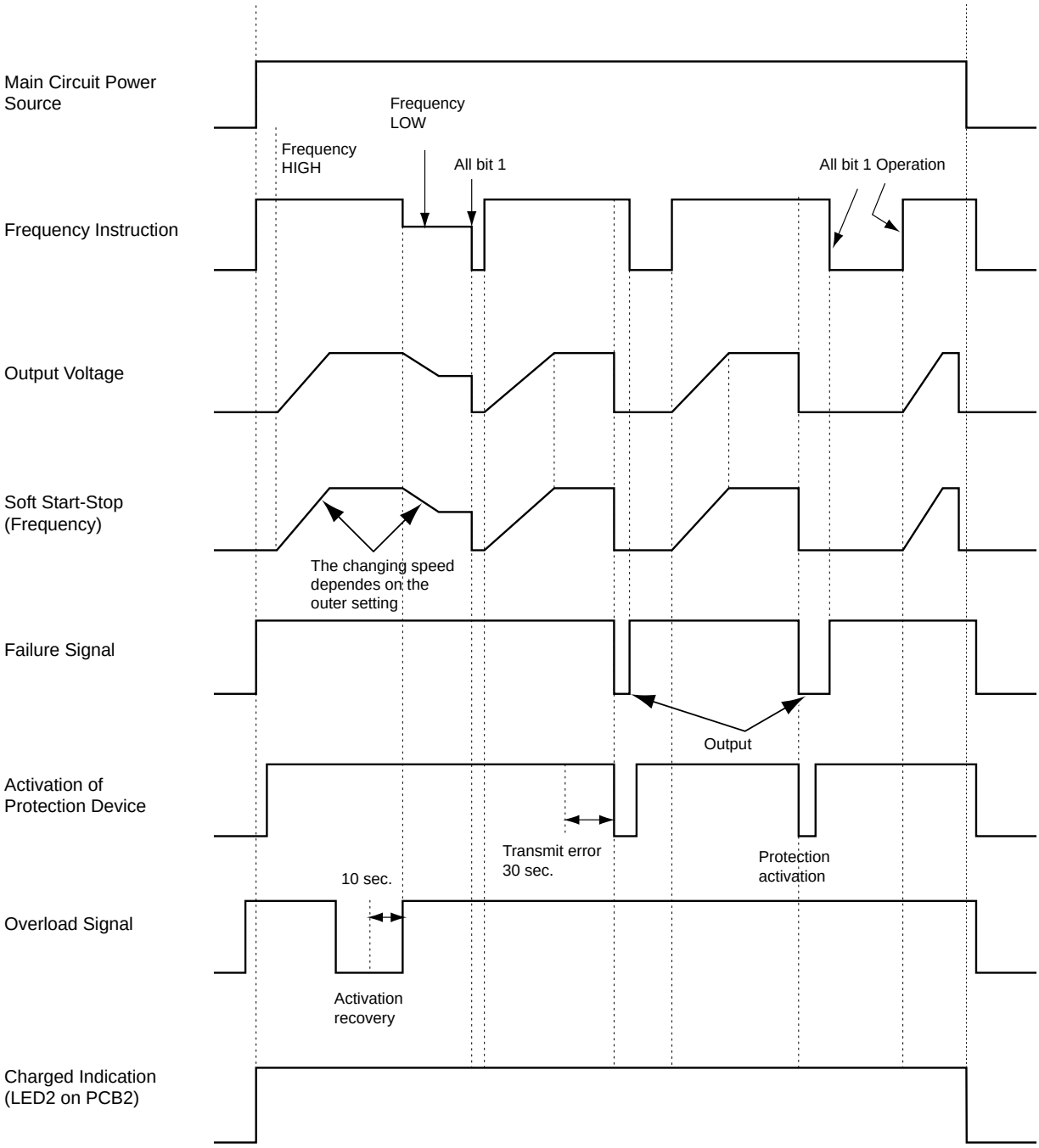

Все каталоги и инструкции здесь: https://splitsystema48.ru/instrukcii-po-ekspluatacii-kondicionerov.html

10.1.3. Protective Function

1. Excessive High or Low Voltage for Inverter
   a) Level of Detection
      - When the voltage of direct current is greater than 750 V, abnormalities are detected.
      - When the voltage of direct current is smaller than 350 V, abnormalities are detected.
   b) Function

      When abnormalities are detected, the inverter compressor is stopped and transmit the signal code of stoppage cause to PCB1.
   c) Cancellation of Protection Function

      Transmission for signal code of stoppage cause is cancelled when a stopping order is given or main power source is cut off.
2. Abnormality of Current Sensor
   a) Level of Detection

      When current of the inverter compressor decreases lower than 1.5A during the inverter compressor frequency between 15Hz and 18Hz, an abnormality is detected.
   b) Function

      When abnormalities are detected, the inverter compressor is stopped, and transmit the signal code of stoppage cause to PCB1.
   c) Cancellation of Protection Function

      Transmission for signal code of stoppage cause is cancelled when a stopping order is issued or main power source is cut off.
3. Overcurrent Protection for Inverter
   a) Level of Detection

      When the current detected by current sensor reaches 150% of the rated current, overcurrent is detected. (Instantaneous Overcurrent)

      When the current detected by current sensor exceeds 105% of the rated current continuously for 30 seconds or for 3.5 minutes in total during a 10 minutes period, overcurrent is detected. (Electric Thermal Relay)
   b) Function

      When abnormalities are detected, the inverter compressor is stopped and transmit the signal code of stoppage cause to PCB1.
   c) Cancellation of Protection Function

      Transmission for signal code of stoppage cause is canceled by stopping order is issued or main power source is cut off.
4. Protection of transistor module and IPM
   a) Level of Detection

      When some of the output terminals between “U” and “V”, “V” and “W”, “W” and “U” of transistor module or IPM are short-circuited, an abnormality is detected.

      When the running current of transistor module or IPM reaches (Maximum Rated Current x 105%), an abnormality is detected.

      When an internal temperature is measured by internal thermistor of transistor module or IPM, an abnormality is detected.

      When the control voltage of transistor module or IPM decreases, an abnormality is detected.
   b) Function

      When abnormalities are detected, the inverter compressor is stopped and the signal code of stoppage cause is transmitted to PCB1.
   c) Cancellation of Protection Function

      Transmission for signal code of stoppage cause is canceled when a stopping order is issued or main power source is cut off.
5. Fin Temperature Increase
   a) Level of Detection

Все каталоги и инструкции здесь: https://splitsystema48.ru/instrukcii-po-ekspluatacii-kondicionerov.html

When the temperature of internal thermistor exceeds more than 100 ºC, an abnormality is detected.

b) Function

When abnormalities are detected, the inverter compressor is stopped and the signal code of stoppage cause is transmitted to PCB1.

c) Cancellation of Protection Function

Transmission for signal code of stoppage cause is canceled when a stopping order is issued or main power source is cut off.

6. Earth Detection

a) Level of Detection

When the starting current of the compressor reaches 80% of the overcurrent protection value, an abnormality is detected.

b) Function

When abnormalities are detected, the inverter compressor is stopped and the signal code of stoppage cause is transmitted to PCB1.

c) Cancellation of Protection Function

Transmission for signal code of stoppage cause is canceled when a stopping order is issued or main power source is cut off.

10.1.4. Overload Control

a) Level of Detection

When the output current exceeds 105% of the maximum output current, an abnormality is detected.

b) Function

An overload signal is issued when output current exceeds 105% of the maximum output current, and the frequency decreases.

For 10 seconds after the output current decreases lower than 88% of the rated current, the operation is performed with the compressor frequency limited to the upper level frequency when the output current decreases lower than 88% of the rated one.

However, if the frequency order is smaller than the maximum value, the operation is performed according to the order.

c) Cancellation of Protection Function

After the operation described in the above item (b) is performed for 10 seconds, this control is canceled

Все каталоги и инструкции здесь: https://splitsystema48.ru/instrukcii-po-ekspluatacii-kondicionerov.html

10.2. Thermistor

10.2.1. Position of thermistor

(Example: RAS-30FSN2)

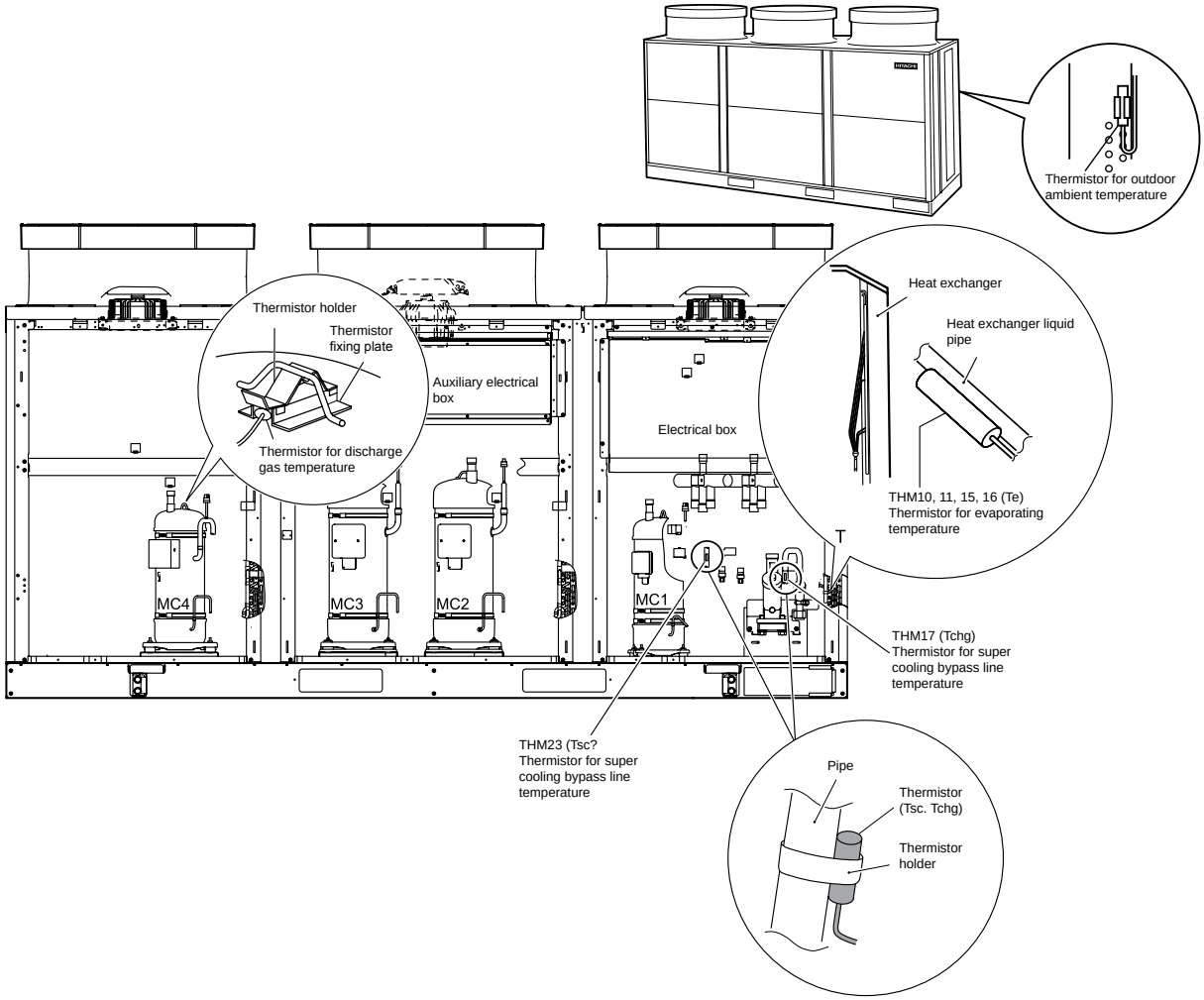

10.2.2. Resistance value of the thermistor

■ **Thermistor for upper part temperature of compressor (for prevention of discharge gas overheating)**

a. There is a thermistor that checks the temperature of the upper part of the compressor in order to prevent the discharge gas from overheating. If the discharge gas temperature increases excessively, the deterioration of the lubrication oil and its lubrication properties will occur. This will cause a shorter compressor life.

b. If the discharge gas temperature increases excessively, the compressor temperature increases. In the worst case, the winding of the compressor motor will burn out.

c When the temperature of the upper part of the compressor increases during the heating process, the unit is controlled according to the following method:

– An electronic expansion valve of the liquid bypass opens and the high-pressure refrigerant returns to the compressor through the accumulator. This decreases the compressor temperature.

– If the temperature of the upper part of the compressor

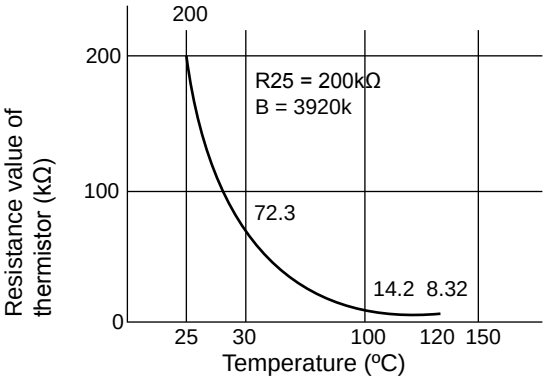

Resistance characteristics of thermistor for discharge gas overheating protection

10

Все каталоги и инструкции здесь: https://splitsystema48.ru/instrukcii-po-ekspluatacii-kondicionerov.html

exceeds 132°C for 10 minutes, the compressor will stop. Even if an electronic expansion valve opens in that situation, the compressor will also stop. This way, the compressor is protected. Resistance values of the thermistor are shown in the figure.

d. If the temperature of the upper part of the compressor exceeds 132 °C for 10 minutes during the cooling process, the compressor will stop according to the following method.

Operation	Upper part temperature of compressor	Defecting period
Cooling	Over 132ºC	10 minutes (continuously)
	Over 140ºC	5 seconds (continuously)
Heating	Over 132ºC	10 minutes (continuously)
	Over 140ºC	5 seconds (continuously)
Defrosting	Over 132ºC	5 seonds (continuously)

■ **Thermistor for the outdoor temperature (THM7)**

When the outdoor ambient temperature decreases to -8°C or a lower temperature during the cooling process, the compressor will stop. Resistance values of the thermistor are shown below.

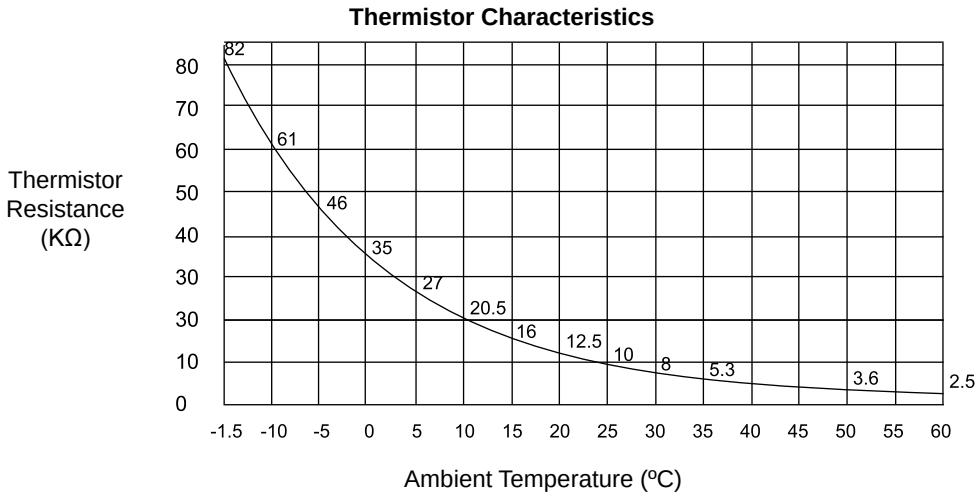

Все каталоги и инструкции здесь: https://splitsystema48.ru/instrukcii-po-ekspluatacii-kondicionerov.html

■ **Thermistor for the defrost operation (THM10, THM11 and THM15)**
The resistance values of this thermistor are the same as the resistance values of the thermistor for the outdoor ambient temperature.

■ **Thermistor for the room temperature control (thermistor for the inlet air temperature of the indoor unit, THM1)**
The thermistor for the inlet air temperature (THM1) controls the room temperature. The remote control switch displays the selected temperatures by means of figures. Set the room temperature so that the room temperature does not become too cool or too hot. It is recommended to set the room temperature in the following ranges:

– Economical cooling mode: 27°C to 29°C
– Economical heating mode: 18°C to 20°C

The resistance values of the thermistor are shown below

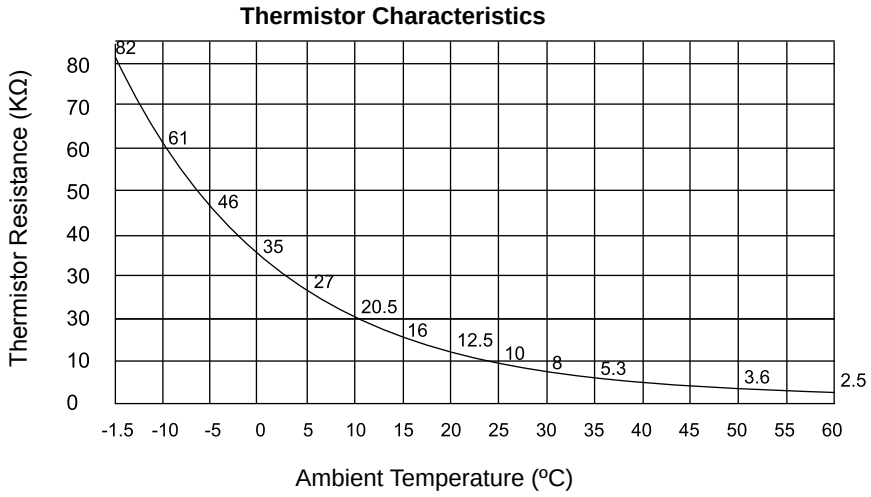

CAUTION:
The thermo-off valve of the thermistor for the inlet air temperature of the indoor unit is set at a higher temperature than the temperature displayed on the remote control switch by 4°C (the maximum inlet air temperature is 34°C). The suction air temperature during the heating process has a tendency to become higher than the temperature of the occupied zone in order to provide a more efficient heating operation.

■ **Thermistor for the control of the discharge air temperature (Thermistor for the discharge air temperature of the indoor unit, THM2)**
The thermistor for the discharge air temperature (THM2) prevents the cold blow during the heating process. The resistance values of the thermistor are shown in Fig. 10.4.

■ **Thermistor for the liquid pipe temperature of the indoor heat exchanger**
When the temperature of the indoor heat exchanger decreases to 0°C or a lower temperature for 3 minutes, the thermostat automatically turns off. When the temperature of the indoor heat exchanger increases to 16°C or a higher temperature, the thermostat turns on.

The purpose of this function is to prevent frosting on the indoor heat exchanger during the cooling process and the dry operation.

The resistance values of the thermistor are shown in the figure above

■ **Thermistor for the gas pipe temperature of the indoor heat exchanger**
The thermistor for the gas pipe temperature senses the evaporating temperature during the heating process. The resistance values of the thermistor are shown in the figure above.

Все каталоги и инструкции здесь: https://splitsystema48.ru/instrukcii-po-ekspluatacii-kondicionerov.html

10.3. Electronic expansion valve

10.3.1. Electronic expansion valve for the outdoor unit

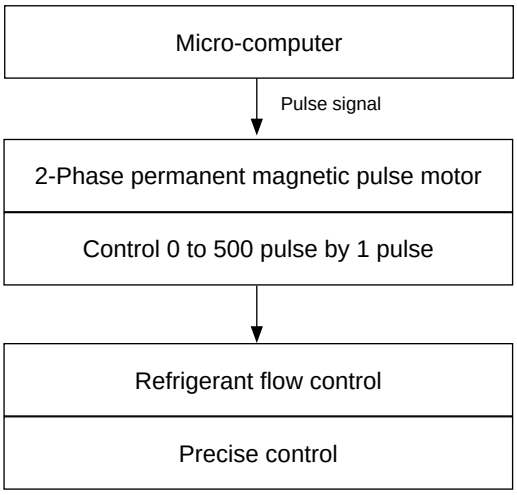

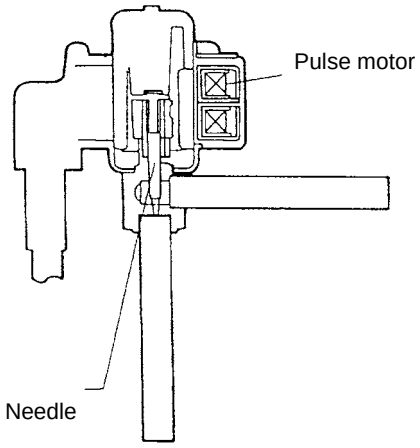

Items	Specifications
Applicable to the models	For the main cycle of: RAS-8~48FSN2
Type	UKV(10.0 USRT) Series/UKV (5.0USRT) Series for MVB
Refrigerant	R410A
Working temperature range	-30°C ~ 65°C (Operation time of the coil: less than 50%)
Mounting direction	Drive shaft in vertical direction within an angle of 45° as maximum
Flow direction	Reversible
Drive method	4-Phase canned motor method
Rated voltage	DC12V±1.8V
Drive condition	80±5PPS (Pulse width at ON: 36mm sec, OFF: 60mm sec) 1,2 Phase excitation
Coil resistance (each phase)	46Ω ± 3Ω (at 20°C)
Wiring diagram, Drive circuit and activation mode	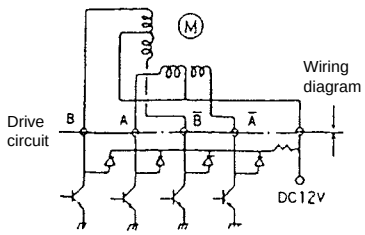 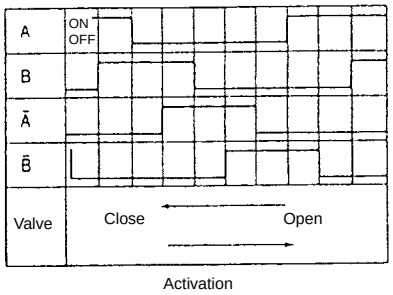

Все каталоги и инструкции здесь: https://splitsystema48.ru/instrukcii-po-ekspluatacii-kondicionerov.html

10.4. Pressure sensor

High-pressure control

A high-pressure sensor detects the high pressure during the heating process. The PID control with the operation capacity of the indoor units controls the compressor frequencies. This way the high pressure is controlled within an appropriate range. The output of the high-pressure sensor during the heating process performs the protective control and the control of the gas bypass valve.

Low-pressure control

A low-pressure sensor detects the suction pressure during the cooling process. The PID control with the operation capacity of the indoor units controls the compressor frequencies. This way the suction pressure is controlled within an appropriate range.
If the suction pressure becomes excessively low, the cooling action may be insufficient and the parts in the refrigerant cycle may be damaged. Therefore, if the output of the low-pressure sensor indicates vacuum and the valve remains in the same position for 12 minutes or longer, the compressor will stop in order to avoid damage.

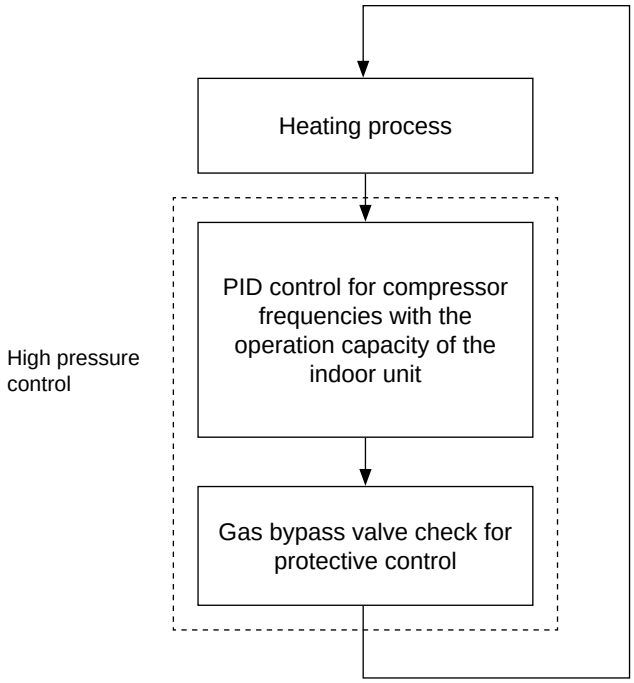

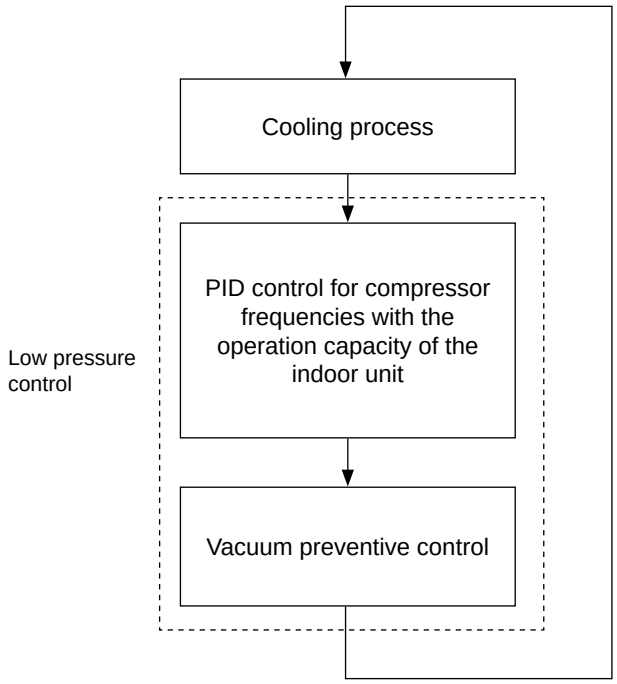

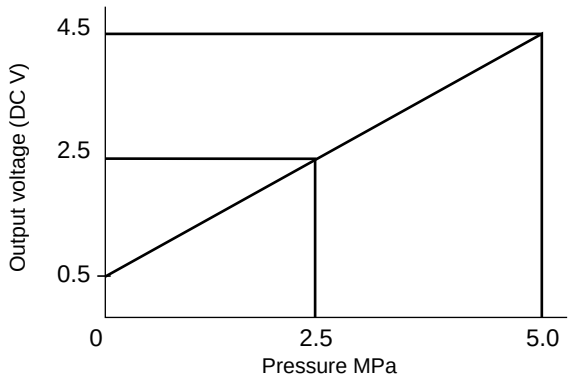

Output characteristics of high pressure sensor

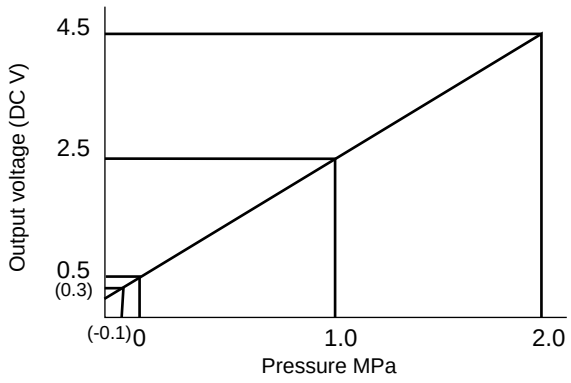

Output characteristics of low pressure sensor

Все каталоги и инструкции здесь: https://splitsystema48.ru/instrukcii-po-ekspluatacii-kondicionerov.html

10.5. Scroll compressor

10.5.1. Reliable mechanism for low vibrating and low sound

1. The rotating direction is definite.
2. The pressure inside of the chamber is high pressure, and the surface temperature of the chamber is 60 °C to 110 °C.

10.5.2. Principle of compression

1. The gas is inhaled from the inlet port at the outer frame of the fixed scroll.

↓

2. The gas inside of the compression space is compressed toward the center of the scroll.

↓

3. The compression space is minimum at the center of the scroll, and the gas compressed at the maximum is discharged from the outlet port of at the center of the scroll.

↓

4. The above procedures (Suction Compression Discharge) is repeated continuously.

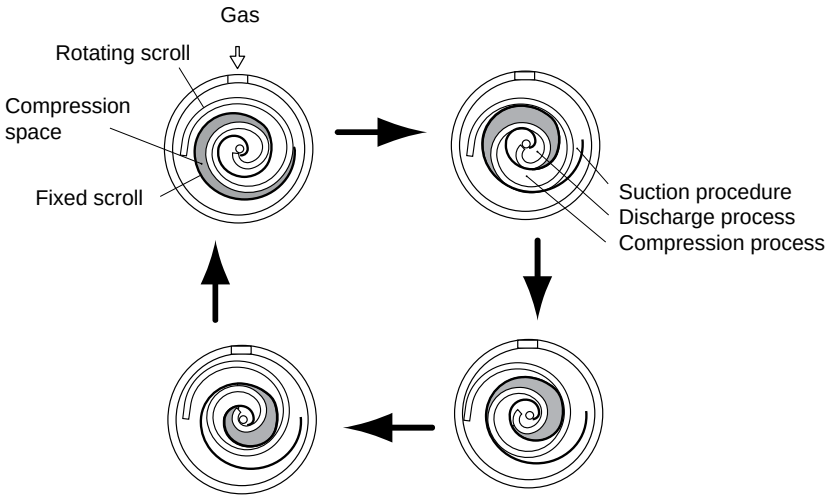

Все каталоги и инструкции здесь: https://splitsystema48.ru/instrukcii-po-ekspluatacii-kondicionerov.html

11. Field work instruction

Contents

11. Field work instruction 263
11.1. Checking the power source and the wiring connection 264
11.2. Burnt-out compressor due to an insufficient refrigerant charge 264
11.3. Insufficient cooling performance when a long piping is applied 265
11.4. Alarm Code “31” 265
11.5. Not cooling well due to insufficient installation space for the outdoor unit 266
11.6. Caution with the refrigerant leakage 267
11.6.1. Maximum permissible concentration of the HFC Gas 267
11.6.2. Calculation of the refrigerant concentration 267
11.6.3. Countermeasure for the refrigerant leakage according to the KHK standard 267
11.7. Maintenance work 269
11.7.1. Pump-down method for replacing the compressor 270

Все каталоги и инструкции здесь: https://splitsystema48.ru/instrukcii-po-ekspluatacii-kondicionerov.html

11.1. Checking the power source and the wiring connection

Check the following items in the case of abnormal operation:

No.	Check item	Procedure
1	Is the breaker of the fuse cut out?	Check the secondary voltage of the breaker and the fuse by means of a tester.
2	Is the secondary power source on the transformer correct?	Disconnect the secondary side of the transformer and check the voltage by means of a tester. 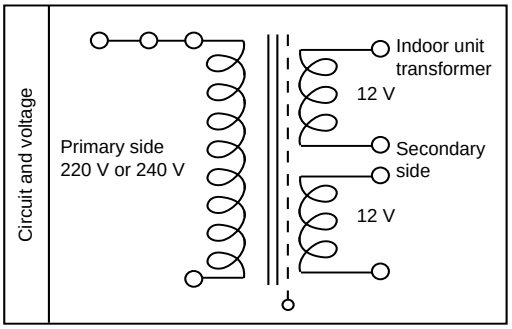
3	Is the wiring loosened or incorrectly connected?	Check the wiring connection on the PCB. – Thermistor connectors – Connector of the remote control cable – Connector of the transformer – Each connector in a high-voltage circuit Check the connectors according to the **Electrical Wiring** diagram.

11.2. Burnt-out compressor due to an insufficient refrigerant charge

■ **Question and answer for the field work**

Example 1: Burnt-out compressor due to an insufficient refrigerant charge	
Phenomenon	After commissioning, the alarm code "08" sometimes occurred and the compressors were burnt out after operating for two months.
Cause	The refrigerant piping work was performed during the summer season. The additional refrigerant was not sufficiently charged from the discharge gas side. This insufficient refrigerant charge resulted in the overheating of the discharge gas and the oil deterioration, which was finally due to the separated operation despite the alarm code "08".
Countermeasure	1. The compressor was replaced with a new compressor. 2. The correct refrigerant amount was charged according to the refrigerant piping length and the connected indoor units.
Remarks	Additional refrigerant charge: Open the liquid stop valves slightly when you charge the additional refrigerant from the check joint of the liquid stop valves (the discharge gas side) during the cooling process. If the liquid stop valve is fully open, it is difficult to charge the additional refrigerant. Do not charge the refrigerant from the gas stop valve.

Все каталоги и инструкции здесь: https://splitsystema48.ru/instrukcii-po-ekspluatacii-kondicionerov.html

11.3. Insufficient cooling performance when a long piping is applied

■ **Question and answer for the field work**

Example 2: Insufficient cooling performance when a long piping is applied	
Phenomenon	Sufficient cooling was not available for an indoor unit that was located at the farthest position.
Cause	If the location of an outdoor unit is 20 meters lower than the location of the indoor units, resetting of the DIP switch DSW3 is required. However, no setting was performed. Therefore, the largest discharge pressure was not increased. This resulted in an insufficient cooling performance for the indoor unit. 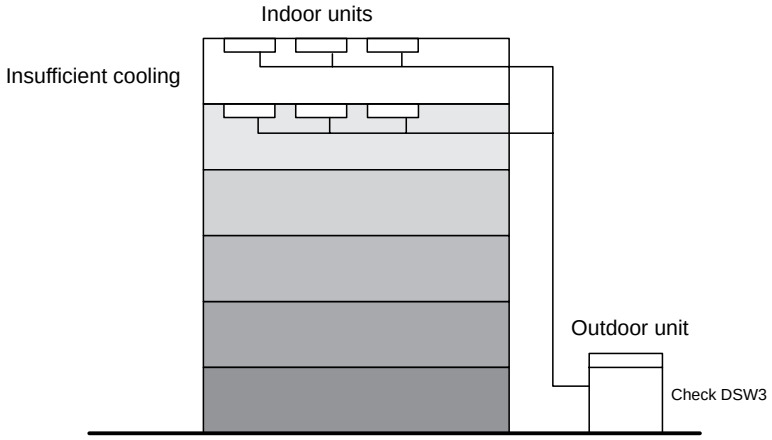
Countermeasure	The setting of the DSW3 was changed.
Remarks	Pay a special attention to the size of the liquid pipe if the lift between the indoor units and the outdoor units is higher than 20 meters. Refer to "Piping Work in TC" for details.

11.4. Alarm Code "31"

■ **Question and answer for the field work**

Example 3: Alarm code "31"	
Phenomenon	Alarm code "31" sometimes occurred and the system stopped.
Cause	The combination of the indoor units and the outdoor unit was the following. 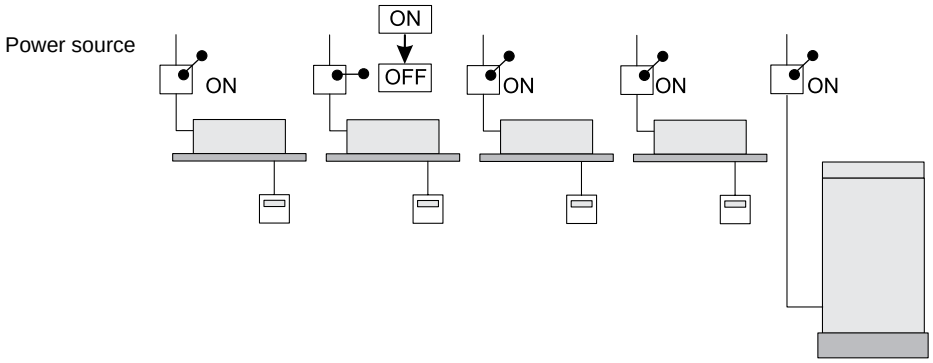
	This system was used in a tenant building. One of tenant's customers turned off the main switch for the indoor unit while other indoor units are running. This results in a different setting of the total indoor unit capacity in the same refrigerant cycle.
Countermeasure	All the main switches for the indoor units were always ON.

Все каталоги и инструкции здесь: https://splitsystema48.ru/instrukcii-po-ekspluatacii-kondicionerov.html

11.5. Not cooling well due to insufficient installation space for the outdoor unit

Question and answer for the field work

Example 5: Not Cooling Well due to Insufficient Installation Space for Outdoor Unit	
Phenomenon	Cooling operation was well performed through the intermediate season. However, the cooling operation was not well available when the outdoor temperature was higher than 35°C.
Cause	As the outdoor units were installed without a sufficient installation space, the hot discharge air from other outdoor units was circulated. In this case, though the outdoor temperature was 35°C, the actual suction air temperature was nearly 50°C and Protection System from Excessively High Suction Pressure was activated, the frequency of the compressor was decreased and the cooling capacity was also decreased accordingly. As the outdoor units in-line were installed back to back with a distance of 600 mm between each outdoor unit's back, the hot discharged air from other outdoor units was circulated. 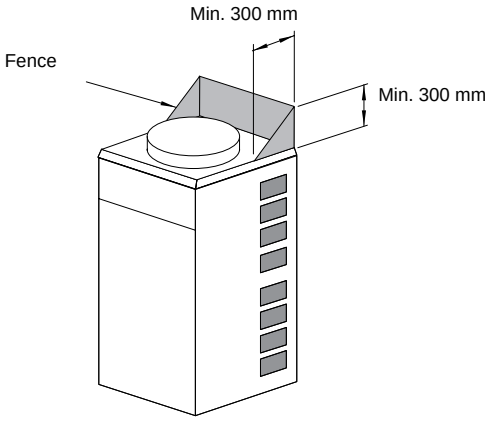
Countermeasure	To protect the unit from a short circuit, fences were mounted at the discharge air side as shown

Все каталоги и инструкции здесь: https://splitsystema48.ru/instrukcii-po-ekspluatacii-kondicionerov.html

11.6. Caution with the refrigerant leakage

The designers and the installers have the responsibility to follow the local codes and the local regulations that specify the safety requirements against the refrigerant leakage.

11.6.1. Maximum permissible concentration of the HFC Gas

The refrigerant R410A, which is charged in the SET-FREE FSN2 system, is an incombustible non-toxic gas. However, if the leakage occurs and the gas fills a room, the gas may cause suffocation.

The maximum permissible concentration of the HFC gas and the R410A in the air is *0.3 kg/m³, according to the refrigeration and air conditioning system standard (KHK S 0010) by the KHK (High-Pressure Gas Protection Association) Japan. Therefore, you must take some effective measures in order to lower the R410A concentration in the air below 0.3 kg/m³, if there is a leakage.

11.6.2. Calculation of the refrigerant concentration

1. Calculate the total quantity of refrigerant R (kg) that is charged in the system that connects all the indoor units of the rooms that need air conditioning systems.
2. Calculate the room volume V (m³) of each room.
3. Calculate the refrigerant concentration C (kg/m³) of the room according to the following equation:

$\frac{R}{V} = C$	R: Total quantity of charged refrigerant (kg) V: Room volume (m³) C: Refrigerant concentration (≤*0.3 kg/m³ for the R410A)
* Use this value only for reference because this value is not fixed yet.	

11.6.3. Countermeasure for the refrigerant leakage according to the KHK standard

According to the KHK standards, you should arrange the facility as follows so that the refrigerant concentration will be bellow *0.3 kg/m³.

1. Provide a shutterless opening that will allow the fresh air to circulate into the room.
2. Provide a doorless opening with a size of 0.15% or more to the floor area.
3. Provide a ventilator, which must be linked with a gas leak detector, with a ventilating capacity of 0.4m³/min or more per Japanese Refrigeration Ton (=compressor displacement m³/h / 5.7 of the air conditioning system utilizing refrigerant R410A).

O.U. model	Ton
RAS-8~12FSN2	4.11
RAS-14/16FSN2	6.16
RAS-18/20FSN2	8.21
RAS-22/24FSN2	9.32
RAS-26/28FSN2	10.43
RAS-30~36FSN2	12.48
RAS-38~42FSN2	15.64
RAS-44~48FSN2	16.75

4. Pay a special attention to the place, such as a basement and others, where the refrigerant may stay, because the refrigerant is heavier than the air.

(*) In case of KHK S 0010, this value should be decided according to the each country's regulation such as ISO5149 and EN 378

Все каталоги и инструкции здесь: https://splitsystema48.ru/instrukcii-po-ekspluatacii-kondicionerov.html

Example

Room	R (kg)	V (m³)	C (kg/m³)	Countermeasure
A	50	300	0.17	-
B	110	1000	0.11	-
C	60	175	0.34	0.06 m³ Opening
D	60	175	0.34	0.06 m³ Opening
C+D	60	350	0.171	-
E	60	100	0.6	2m³/min. Ventilator linked with gas leak detector

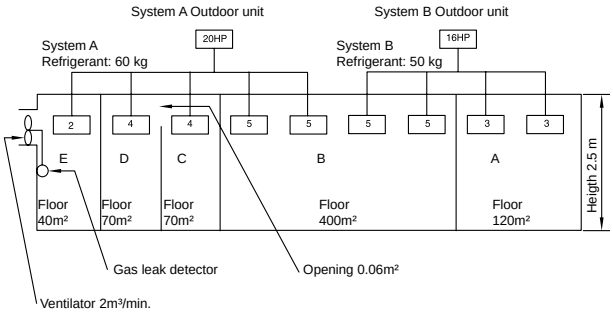

If local codes or regulations are specified, follow them

Example

European Standard EN378
R410A Commercial office building class D occupancy
MR = C × V
MR: Maximum charge or leakange of refrigerant (kg)
C: Maximul allowable concentration = 0.17 (kg/m³)
V: Volume of space (m³)

Все каталоги и инструкции здесь: https://splitsystema48.ru/instrukcii-po-ekspluatacii-kondicionerov.html

11.7. Maintenance work

■ **For the indoor unit and the outdoor unit**

1. Fan and fan motor
   - Lubrication: All the fan motors are prelubricated and sealed at the factory. Therefore, no lubrication maintenance is required.
   - Sound and vibration: Check for abnormal sounds and vibrations.
   - Rotation: Check the clockwise rotation and the rotating speed.
   - Insulation: Check the electrical insulation resistance.
2. Heat exchanger
   - Clogging: Inspect the heat exchanger at regular intervals and remove any accumulated dirt and any accumulated dust from the heat exchanger. You should also remove from the outdoor units other obstacles, such as the growing grass and the pieces of paper, which might restrict the airflow.
3. Piping connection
   - Leakage: Check for the refrigerant leakage at the piping connection.
4. Cabinet
   - Stain and Lubrication: Check for any stain and any lubrication. Remove the stain and the lubrication.
   - Fixing Screw: Check for any loosened screw or any lost screw. Fix the loosened screws and the lost screws. Insulation Material: Check for any peeled thermal insulator on the cabinet. Repair the thermal insulator.
5. Electrical equipment
   - Activation: Check for an abnormal activation of the magnetic contactor, the auxiliary relay, the PCB and others.
   - Line condition: Pay attention to the working voltage, the working amperage and the working phase balance. Check for any faulty contact that is caused by the loosened terminal connections, the oxidized contacts, the foreign matter, and other items. Check the electrical insulation resistance.
6. Control device and protection device

- Setting: Do not readjust the setting in the field unless the setting is maintained at a point that is different from the point that is listed in the section “5.5. Protection and Safety Control” of this Service Manual.

■ **For the indoor unit only**

1. Air filter
   - Cleaning: Check for any accumulated dirt and any accumulated dust. Remove the dirt and the dust.
2. Drain pan, drain-up mechanism and drain pipe
   - Drain line: Check and clean the condensate drain pipe at least twice a year.
   - Drain-up mechanism: Check the activation of the drain-up mechanism.
3. Float switch
   - Activation: Check the activation of the float switch.

■ **For the outdoor unit only**

1. Compressor
   - Sound and vibration: Check for abnormal sounds and vibrations.
   - Activation: Check that the voltage drop of the power supply line is within 16% at the start and within 2% during the operation.
2. Reverse valve
   - Activation: Check for any abnormal activation sound.
3. Strainer
   - Clog: Check that there is no temperature difference between both ends.
4. Ground wire
   - Ground line: Check for the continuity to earth.
5. Oil heater
   - Activation: You should activate the oil heater at least twelve hours before the start-up by turning ON the main switch.

Все каталоги и инструкции здесь: https://splitsystema48.ru/instrukcii-po-ekspluatacii-kondicionerov.html

11.7.1. Pump-down method for replacing the compressor

No.	Procedure	Remarks
1	Turn off the main switch of the outdoor unit.	
2	Remove the covers, the thermistor, the crankcase heater, the power wirings, and other items according to the chapter "Removing the Parts of the Oudoor Unit".	Make sure that the terminal part of the detached power supply wires is not exposed by the winding insulation tape and other items.
3	Attach the manifold to the check joint of the high-pressure side and the low-pressure side of the outdoor unit.	
4	Turn on the main switch of the outdoor unit.	
5	Set the exclusion of the compressor by setting the DSW so that a broken compressor will not work. You can set the exclusion of the compressor by setting the DSW5-1~DSW5-6 of the PCB1.	DSW5-1 ON: Compressor No.1 (52C1: Inverter compressor), DSW5-2 ON: Compressor No.2 (52C2), DSW5-3 ON: Compressor No.3 (52C3), and the others.
6	Pre-Pump-Down by means of the Cooling Process: – Start the test run of the cooling process. (DSW4-1 ON). – The test run should run for approximately 20 minutes (until the test run reaches PS>0.3Mpa, Td>75 ºC, as a rough target). – Display of Ps in seven seconds of the outdoor PCB. – Close the gas stop valve quickly. Then, perform the enforced stoppage (DSW4-4 ON) when Ps < 0.2Mpa. – Set the DSW4-1 to OFF in order to cancel the test run of the cooling. Set the DSW4-4 to OFF in order to cancel the enforced stoppage.	– After closing the gas stop valve, the decrease of Ps is fast. To guarantee the reliability of the compressor, make sure that **the decrease does not reach PS< 0.1Mpa** when you perform the enforced stoppage.
7	The compressor replacing mode is performed: – The DSW4-6 on the outdoor unit PCB→ ON (The cooling is run).	– This operation is performed for up to a maximum of ten minutes. – If the inverter compressor is excluded, the operation starts after three minutes.
8	The operation finishes when one of the following conditions occurs: 1) Ten minutes have passed and STP is displayed in seven segments. 2) "08" is displayed in seven segments. 3) When Ps< 0.1MPa is continued for one minute, in ten minutes STP is displayed in seven seconds and the operation finishes.	– The operation may finished when any of the conditions 1) to 3) occurs.
9	Close the liquid stop valve completely.	To avoid the spillage of all the refrigerant if the check valve is broken.

Все каталоги и инструкции здесь: https://splitsystema48.ru/instrukcii-po-ekspluatacii-kondicionerov.html

No.	Procedure	Remarks
10	Check for a leakage of the check valve on the discharge gas side: – DSW4-4 (Enforced stoppage of the compressor) → ON, so that the compressor will not run although the running command is sent from the remote control switch. – Check that variation of Ps on the outdoor unit PCB is 17 seconds. Make sure that the Ps increase is within 0.03 Mpa in two minutes after the Ps increase at the stoppage (during approximately five minutes). Also make sure that Pd>Ps. 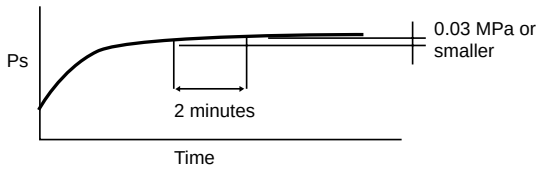 	– When you stop the compressor for replacing: – You can check the leakage of the check valve by means of the Ps variation because the SVA opens so that the discharge gas side of the inverter compressor can connect to the low-pressure side. – 0.03 Mpa / 2 minutes is within the permissible limits for the check valve on the discharge gas side. – The leakage of the check valve may cause an incorrect brazing, due to the gas pressure at the brazing of the discharge piping. – If the compressor-replacing mode is performed again, set the DSW4-4 to OFF and keep the DSW4-4 at the OFF side during ten minutes. Then, start according to the procedure No. 6.
11	Collect the refrigerant by means of the refrigerant collection: – Perform either A or B, depending on the process 10. A: The leak rate at the process 10 is within the specification → Collect the refrigerant only at the low-pressure side. B: The leak rate at the process 10 is greater than the specification → Collect all the refrigerant of the outdoor unit side by means of the machine.	– The discharge of the refrigerant in the atmosphere is strictly forbidden. Make sure that the refrigerant is collected by the collector. – Keep a note of the quantity of the collected refrigerant.
12	After collecting the refrigerant, remove the change hose (collector side) of the low-pressure side, so that the low-pressure side of the refrigerant cycle will be the atmosphere pressure.	– Make sure that there is no pressure increase of the low-pressure sides after collecting the refrigerant. – Make sure that the refrigerant cycle is the atmosphere pressure. Otherwise, problems such as the blowing of gas and the suction of the cutting material) may occur when you are removing the compressors.
13	Turn OFF the main switch of the outdoor unit.	
14	Perform the replacement of the compressor and the change of the refrigerant oil according to the section "Replacing the Compressor".	Make sure that you follow the instructions.
15	Perform the vacuum from the check joint of the low-pressure side.	If you collect the refrigerant only on the low-pressure side (**A** in 11). You cannot perform the vacuum of the refrigerant from the check joint of the high-pressure side.
16	Open the liquid stop valve and the gas stop valve completely when you finish the vacuum.	
17	Make sure that the power is turned OFF and attach the following items: the power supply wire, the thermistor, the crankcase heater, the 63H wiring, the panel and the nut).	
18	Set the DSW back to the original setting. Make sure that all the wirings to the compressor are connected correctly.	
19	Recharge the refrigerant that is collected in the process by the stop valve of the liquid side during the cooling at the TEST RUN mode.	If the replacement of the compressor takes more than two hours, an additional change of the refrigerant is necessary. Additional Change = (Replacing Time – 2 hours) x 0.5kg.

Все каталоги и инструкции здесь: https://splitsystema48.ru/instrukcii-po-ekspluatacii-kondicionerov.html

Hitachi Air Conditioning Products Europe, S.A.
Ronda Shimizu,1 - Políg. Ind. Can Torrella
08233 Vacarisses (Barcelona) España
ISO 9001 Certified by AENOR, Spain
ISO 14001 Certified by AENOR, Spain

Hitachi Appliances, Inc.
Shimizu-shi, Shizuoka-ken, Japan
ISO 9001 Certified by JQA, Japan
ISO 14001 Certified by JQA, Japan

Hitachi Air Conditioning Products (M) Sdn. Bnd.
Lot No. 10, Jalan Kemajan Bangi Industrial Estate
43650 Bandar Baru Bangi, Selangor Darul Ehsan, Malaysia
Certification ISO 9001, Malaysia
Certification ISO 14001, Malaysia

HITACHI
Inspire the Next

SMGB0049 rev.0 - 04/2009 - Printed in Spain

Все каталоги и инструкции здесь: https://splitsystema48.ru/instrukcii-po-ekspluatacii-kondicionerov.html